Pressurisation control systems for staircases, lobbies and escape routes

SODECA

Solutions with **test certificate according to EN 12101-6:2022**

FULL RANGE

ADVANCED

BASIC

EN-12101-6
Smoke and heat control systems:
Specification for pressure
differential systems - Kits

ISTITUTO GIORDANO
Qualità al Plurale
Certificado: NR331151

ITI®
SODECA NATIONAL
TECHNICAL ASSESTMENT
KOT-ITB-2017/0092

SODECA offers solutions in industrial ventilation, smoke evacuation, staircase pressurisation, tunnel ventilation and indoor air quality improvement.

SODECA has grown looking for the best path, always innovating and offering the best customer service, respecting the environment and committed to energy saving. For this reason SODECA wants to be part of the change and focus on a sustainable model.

The environmental management system at SODECA's production plant is **certified ISO 14001 by Bureau Veritas**, which endorses the environmental performance and the continuous improvement resulting from the development of activities to mitigate the impact on the environment. At SODECA, sustainable solutions are integrated into the business strategy by producing with clean energy, reducing emissions and working to reduce waste generation.

BOXPDS PRESSURISATION SYSTEM

Test Certificate Sodeca Kit BOXPDS

1 Scope

The tests confirm the functionality of the Sodeca kit BOXPDS-800-4T-3 for the performance classes 1 and 2 described in Table 2.1 in accordance with EN 12101-6:2022-11 sections 5.1 to 5.4.

2 Performance Classes

Table 2.1 shows the system parameters of the Kit BOXPDS-800-4T-3 in accordance with EN 12101-6:2022-11 paragraph 5.4.1.12.

Table 2.1 System parameters

SOLUTIONS WITH **TEST CERTIFICATE ACCORDING TO EN 12101-6:2022**

The pressurisation solution for stairwells, lobbies, and evacuation routes that complies with the most demanding European standards.

Designed to offer maximum performance in safety, ensuring compliance at both 50Pa and 30Pa.

ADVANTAGES OF THE BOXPDS SYSTEM

Regulatory compliance

Aerodynamic test certificate in accordance with the EN 12101-6:2022 standard. Designed to meet all the requirements of EN 12101-6:2022 and EN 12101-13:2022 standards.

European standards

Tests for electromagnetic compatibility, environmental resistance and IP protection rating in accordance with European standards.

SODECA **Innovation and safety in case of fire**

FAST, SAFE
AND TECHNOLOGICALLY ADVANCED

The BOXPDS pressurisation systems have been designed to provide maximum aerodynamic efficiency and fire safety. Thanks to their advanced technology, they allow safe and quick evacuation in any type of building, ensuring compliance with the most demanding regulatory requirements.

Response times

Guaranteed response times. Very fast reaction systems; in 3 seconds the system operates at maximum airflow capacity.

Quick auto-calibration

Auto-calibration for fast installation and commissioning.

Guaranteed 10,000 cycles

Durability tests of 10,000 cycles, ensuring system reliability and performance at all times.

PRESSURISATION CONTROL SYSTEMS

SODECA pressurisation control systems have been designed in accordance with European standards:

EN 12101-6:2005

Standard for the design, installation, commissioning and maintenance of differential pressure systems, for protection against smoke in escape routes.

EN 12101-13:2022

Update of the previous standard EN 12101-6:2005 for the design, installation, commissioning and maintenance of differential pressure systems, for protection against smoke in escape routes. The use of one or the other standard for the design of a pressurisation system depends on the regulations in force in each country.

EN 12101-6:2022

Standard for testing the performance of the differential pressure kits used for protection against smoke in escape routes.

SMOKE CONTROL METHOD IN THE EVENT OF A FIRE

The overpressure smoke control method consists of pressurisation by injecting air into spaces which are used as escape routes by people in the event of a fire, such as staircases, lobbies, passageways, lift shafts, etc.

This method is based on controlling smoke via the speed of the air and the artificial barrier created by an overpressure condition.

In accordance with the European standard on design, there are different classes of differential pressure systems in buildings, depending on their use and characteristics. In selecting and classifying the system for each specific case, it is necessary to consider the building use, size and established evacuation instructions in the event of fire, as this choice will determine the necessary flow rate delivered by the pressurisation equipment.

It is very important to pay special attention to the choice of system since, depending on its class, different flow rates will be required.

*SODECA pressurisation systems are also compatible with designs compliant with **standard NFPA92.***

RESPONSE TIME

The European standards of design and product of pressurisation systems require all systems be designed in a manner that the force to be applied on a door handle to open it does not exceed 100N and in a manner that makes it possible to respond in just a few seconds to the changing positions of the doors during an evacuation by increasing the supplied flow when a door is open and reducing it to limit overpressure inside the protected space when a door is closed.

STATE-OF-THE-ART CONTROLS

SODECA systems **are equipped with state-of-the-art, built-in controls** that meet the most stringent requirements and are extremely reliable in the face of changes in situation that may occur during a fire, and in "chaotic" evacuation situations in which doors between fire zones and in pressurised smoke-free areas are opened and closed at random.

QUICK AND ACCURATE SYSTEM

Our systems **are capable of reacting quickly and accurately** to these changes, ensuring the required overpressure is always maintained (50 or 30 Pa depending on the standard of design that is used) in situations where doors are closed and maintain the required air speed in any open door situation.

EUROPEAN STANDARDS

This response capacity guarantees that the force used to open a door does not exceed 100N, as set out in **European standards**.

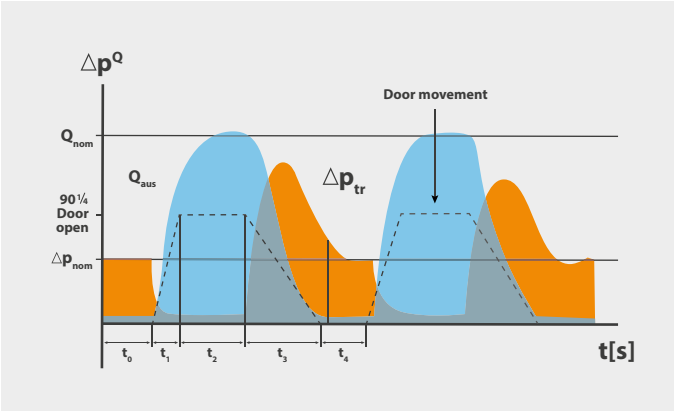

t1: Opening of door (1 second).

t2: Door open: The system delivers 90% of the necessary flow rate in less than 3 seconds.

t3: Closing of door (3 seconds).

t4: Door closed: The system controls the overpressure at 120% of its nominal value in less than 3 seconds, thus preventing prolonged excess pressure and ensuring that the force used on the door handle is no greater than 100N.

Q=Flow P=Pressure

STANDARD EN 12101-6:2005 TYPES OF SYSTEMS

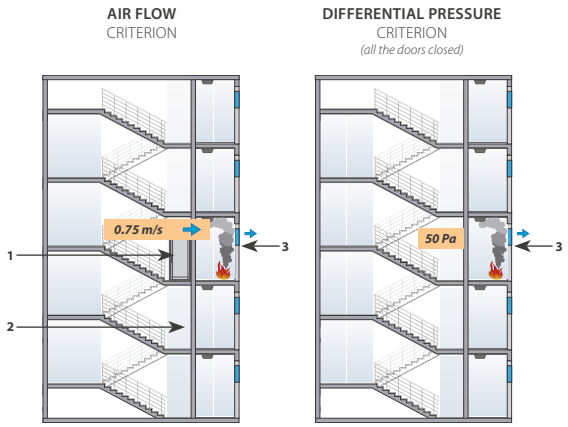

1. Door open. / **2.** Door closed. / **3.** Air exhaust.
**An open door may indicate a free passage of air through a lobby.*

CLASS A SYSTEM

ON-SITE PROTECTION

The project conditions are based on assuming that the building will not be evacuated unless it is directly threatened by the fire.

The level of compartmentalisation of the fire is normally safe for the occupants who remain inside the building.

Therefore it is not very likely that more than one door will be open at the same time in the protected space (either between the stairs and the lobby / corridor or the final exit door).

CLASS B SYSTEM

FOR ESCAPE ROUTES AND FIRE-FIGHTING

A class B differential pressure system may be used to minimise the possibility of serious smoke contamination of the fire control stations during the evacuation of persons and while the fire-fighters are extinguishing the fire.

During the extinguishing operations, it will be necessary to open the door between the lobby and the living quarters to fight a potentially developed fire.

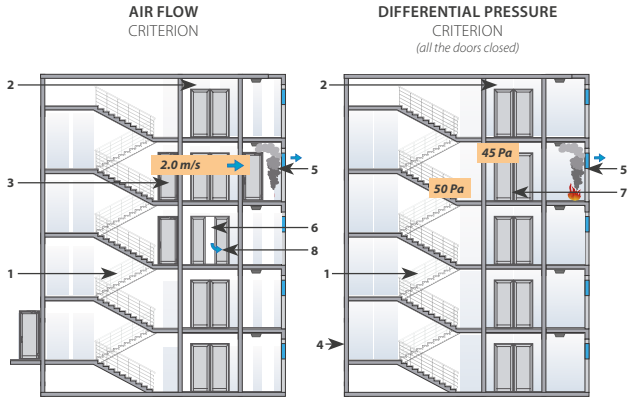

1. Fire stairs. / **2.** Fire-fighting lobbies. / **3.** Door open. / **4.** Door closed. / **5.** Air exhaust. / **6.** Door open (fire-fighting lobbies). / **7.** Door closed (fire-fighting lobbies). / **8.** Air flow from fire-fighter lift shaft.

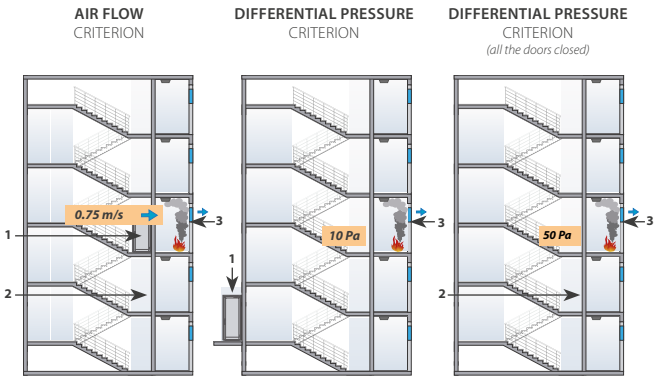

1. Door open. / **2.** Door closed. / **3.** Air exhaust.
**The figure may include lobbies.*

CLASS C SYSTEM

FOR ESCAPE ROUTES VIA SIMULTANEOUS EVACUATION

Class C systems are designed for all the occupants of the building to be evacuated at once when the fire alarm is activated. In the case of a simultaneous evacuation, it is assumed that the stairs will be occupied for the normal evacuation period and then be free of people. Thus, the evacuation will take place during the first stages of the fire development, and during this period, it is accepted that a certain volume of smoke may reach the staircase. The air flow contributed by the pressurisation system can eliminate that smoke from the staircase.

It is assumed that during the evacuation, the occupants will remain alert and ready, and be familiar with the area in which they are moving, with the ensuing reduction of the time they remain inside the building.

CLASS D SYSTEM

FOR ESCAPE ROUTES. RISK TO PERSONS WHO ARE SLEEPING

Class D systems are designed for buildings where the occupants may be sleeping, for example, hotels, shelters and boarding schools.

The time necessary for the occupants to move in a protected space before reaching the final exit may be longer than that expected in the case of persons who are awake and in good physical condition, and the occupants may not be familiar with the building or need help to reach the final exit / protected space.

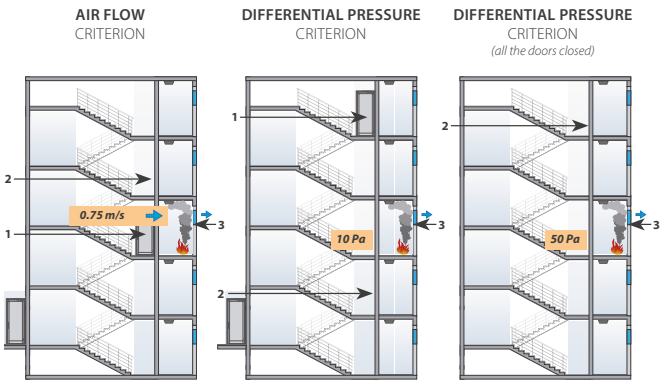

1. Door open. / **2.** Door closed. / **3.** Air exhaust.
**The figure may include lobbies.*

CLASS E SYSTEM

FOR ESCAPE ROUTES WITH EVACUATION IN PHASES

They are used in buildings where fire evacuation is done by phases or as staggered evacuations.

In "evacuation by phases" it is considered that the building would still be occupied for a considerable time while the fire is developing, and so higher fire loads must be considered and hence, a larger volume of smoke and hot gases. (These factors may vary considerably, depending on the type of material in combustion, the fire load generated by them and the load geometry).

In such a situation, the protected staircases must be kept free of smoke to allow the safe evacuation of the people occupying the floors where there is no fire.

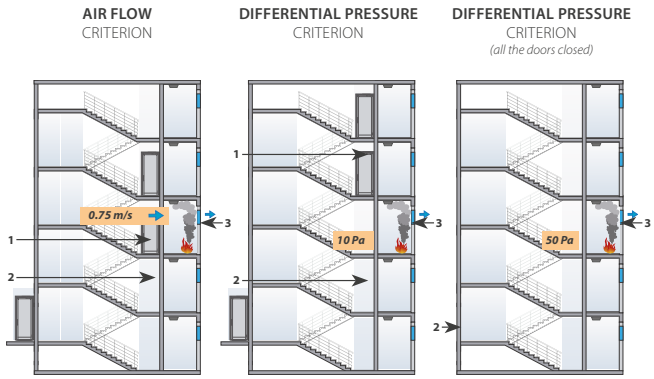

1. Door open. / **2.** Door closed. / **3.** Air exhaust.
**The figure may include lobbies.*

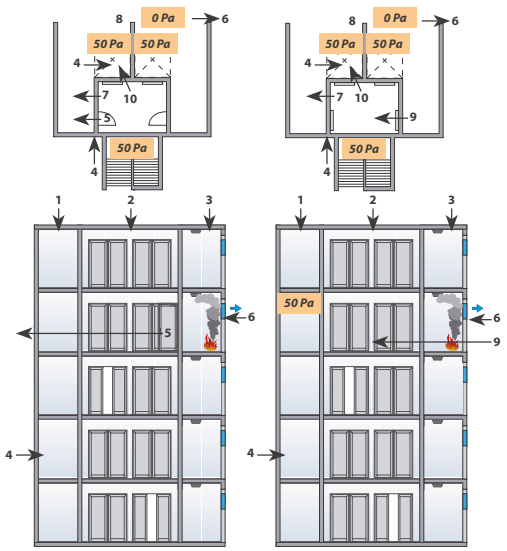

1. Staircase. / **2.** Lobby. / **3.** Living quarters. / **4.** External air supply. / **5.** Door gratings, etc. / **6.** Air exhaust. /
7. Overpressure damper for discharging air to the exterior. / **8.** Living quarters. / **9.** Lift landing. / **10.** Lift cabin.

CLASS F SYSTEM

FIRE PROTECTION SYSTEM AND ESCAPE ROUTES

Class F systems are used to minimise the possibility of serious smoke contamination of the staircases that are used by fire-fighters while the building is being evacuated and while the fire-fighters are extinguishing the fire.

During the extinguishing operations, it will be necessary to open the door between the lobby and the living quarters to fight a potentially developed fire.

This system must be designed so that the staircase and lift shaft (if any) remain free of smoke. If the smoke enters the lobby, the staircase pressure must not lead the smoke to the shaft, and vice versa.

STANDARD EN 12101-6:2005
CRITERIA

DIFFERENTIAL PRESSURE CRITERION

SYSTEM CLASS	A	B	C	D	E	F
Difference in pressure between the staircase and the living quarters (all doors closed)	50 Pa	50 Pa	50 Pa	50 Pa	50 Pa	50 Pa
Difference in pressure on both sides of the living quarters' door (final exit door open)	-	-	10 Pa	10 Pa	10 Pa	-
Doors open (differential pressure criterion) / final exit outdoors	NO	NO	YES	YES	YES	NO
Doors open (differential pressure criterion) / Floor on fire	NO	NO	NO	NO	NO	NO
Doors open (differential pressure criterion) / No. of floors other than the floor on fire	0	0	0	1	2	0
Differential pressure (between lobby and living quarters)	45 Pa*	45 Pa	45 Pa*	45 Pa*	45 Pa*	45 Pa
Differential pressure (between lift shaft and living quarters)	-	50 Pa	-	-	-	50 Pa

AIR FLOW CRITERION

SYSTEM CLASS	A	B	C	D	E	F	
						Location 1	Location 2
Air speed at the door of the floor on fire (doors open)	-	2 m/s	0.75 m/s	0.75 m/s	0.75 m/s	-	1 m/s
Air speed at the staircase door of the floor on fire (Doors open)	0.75 m/s	-	-	-	-	2 m/s	-
Doors open / Final exit to the outside	NO	YES	NO	YES	YES	YES	YES
Doors open / Lift	NO	YES	NO	NO	NO	YES	NO
Doors open / Staircase – Lobby of the floor on fire	YES	YES	YES	YES	YES	YES	NO
Doors open / Staircase – Lobby on floor other than the floor on fire	NO	YES	NO	NO	NO	YES	NO
Doors open / Floor on fire	YES	YES	YES	YES	YES	YES	YES
Doors open / No. of floors other than the floor on fire	0	0	0	0	1	0	0

**It is not mandatory to pressurise the lobby if it only has doors connecting it with the staircase and floors.*

STANDARD EN 12101-13:2022 TYPES OF SYSTEMS

CLASS 1 SYSTEM

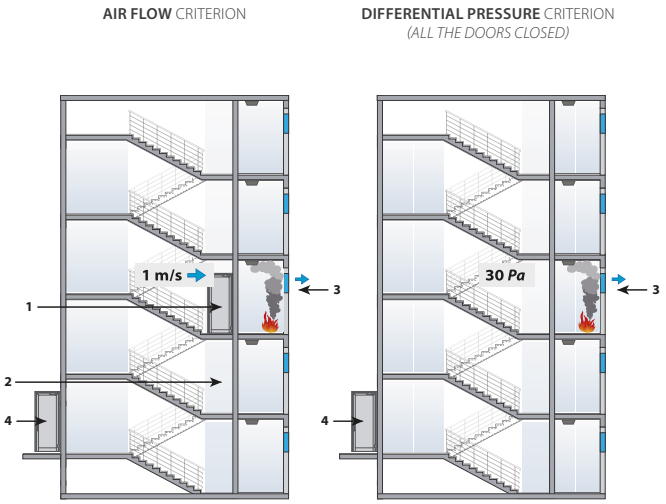

1. Door open. / **2.** Door closed. / **3.** Air exhaust. / **4.** Exit door to the outside**

**An open door may indicate a free passage of air through a single lobby.*

***If we cannot make sure the door is closed with the overpressure system in operation, the design must consider that the door to exit outdoors may not be fully closed.*

SYSTEMS FOR SPECIFIC CASES

The class 1 system is installed in buildings with a high degree of fire protection, either through an automatic extinguishing system or an additional compartment to help contain the fire and/or the propagation of smoke towards the evacuation routes.

In these cases with an open door condition, such a high air speed is not required as is the case of buildings that are not equipped with these additional protection measures.

Class 1 is required:

- In buildings with automatic fast response water sprinkler extinguishing systems in accordance with standard EN 12259-1 (with a response time index (RTI) ≤ 50) that are triggered by temperatures ≤ 72 °C; or
- In residential buildings up to 30 m or below the limits for tall buildings (in accordance with national requirements); or
- In residential buildings with at least two areas without fire load between the protected space and the potential fire source and equipped with self-locking doors; or
- If accepted by competent authorities.

STANDARD EN 12101-13:2022 CRITERIA

CLASS 2 SYSTEM

SYSTEMS FOR GENERAL CASES

The class 2 system is applicable when applying a class 1 system is out of the question. Since the building is not equipped with additional fire protection measures that would help fight the fire and/or minimise the propagation of smoke towards the evacuation routes, the design hypothesis is based on considering a fire that is in full force, for which we must provide a higher air speed through the open door on the floor on fire.

Class 2 is required:

- When class 1 cannot be used; or
- If required by competent authorities.

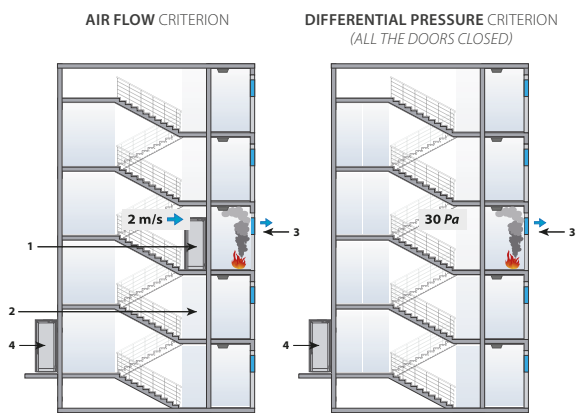

1. Door open. / **2.** Door closed. / **3.** Air exhaust. / **4.** Exit door to the outside**

**An open door may indicate a free passage of air through a single lobby.*

***If we cannot make sure the door is closed with the overpressure system in operation, the design must consider that the door to exit outdoors may not be fully closed.*

DIFFERENTIAL PRESSURE CRITERION

	Class 1	Class 2
Difference in pressure between the staircase and the living quarters, with all doors on the floor closed	≥ 30 Pa	

AIR FLOW CRITERION

	Class 1	Class 2
Air flow speed through the open door on the floor that is on fire	≥ 1 m/s	≥ 2 m/s

OPEN FORCE CRITERION

	Class 1	Class 2
Maximum open force of any	≤ 100 N	

OPERATION AND RESPONSE TIME

	Class 1	Class 2
Initiation time	≤ 60 s	
Operating time	≤ 120 s	
Response time	≤ 5 s	

STANDARD NFPA 92
CRITERIA

SYSTEM **REQUIREMENTS**

When a staircase pressurisation system is installed, the differential pressure between the space on fire and the staircase, with the number of doors open simultaneously using automatic systems must be:

- **Not greater than the value to prevent opening the door** applying a 30 lb (133 N) force in accordance with NFPA 101.
- **Not less than the next value in accordance with the height of the floor** and whether or not sprinklers are installed.

TYPE OF **BUILDING**	HEIGHT BETWEEN **FLOOR AND CEILING**	MINIMUM **DIFFERENTIAL PRESSURE**
With sprinklers	Any	0.05 in. w.g. / 12.5 Pa
Without sprinklers	9 ft / 2.74 m	0.10 in. w.g. / 25 Pa
Without sprinklers	15 ft / 4.57 m	0.14 in. w.g. / 35 Pa
Without sprinklers	21 ft / 6.40 m	0.18 in. w.g. / 45 Pa

The doors that are opened and closed by the occupants during an evacuation may be considered closed. The designer or the local regulation may consider that some doors are open to contemplate air escaping through them as a safety margin of the system, as long as we can guarantee that the force required to open the doors when they are all closed is not exceeded.

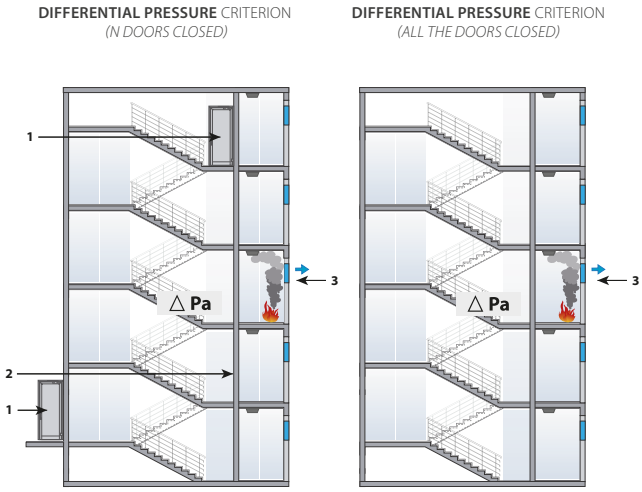

1. Door open. / **2.** Door closed. / **3.** Air exhaust.
**An open door may indicate a free passage of air through a single lobby.*

For example, when the building evacuation strategy anticipates that multiple floors are evacuated simultaneously or the design of the staircase pressurisation system assumes the staircase exit door is open, the staircase pressurisation system may be designed to accommodate more than one open door, at least one of which would be the staircase exit door.

The overpressure kits from SODECA may meet the required operation to comply with NFPA92, quickly adapting the supplied flow to the changing open or closed doors situation, to operate between the minimum and maximum flows as set out in the standard.

CUSTOMER SUPPORT
SOLUTIONS

CONSULTING AND DESIGN

With the aim of offering a comprehensive service, SODECA offers support in consulting, design and personalised studies.

COMPUTATIONAL FLUID DYNAMICS CFD

We have the most advanced computational CFD simulation tools and the necessary experience in their use. This study makes it possible to check if the system operating parameters are complied with, such as smoke behaviour, temperature values, visibility and air speed or the concentration of gases.

QuickFan SODECA SELECTOR

Calculation software

QuickFan is the software used for making calculations and designing ventilation projects. Selecting the most suitable product for your ventilation installation is now easier than ever.

Make it easy with QuickFan!

3D SODECA

3D Models

Through the projects module for QuickFan and by downloading the designs in CAD 3D or REVIT, you can design ventilation projects, make calculations and obtain full technical reports in just a few minutes.

BIM

BIM Format Fans

Saving time and resources when managing projects is possible thanks to the BIM system for more than 5,200 fan models. This format adds additional characteristics and technical information to the model and improves how the execution of a project is monitored.

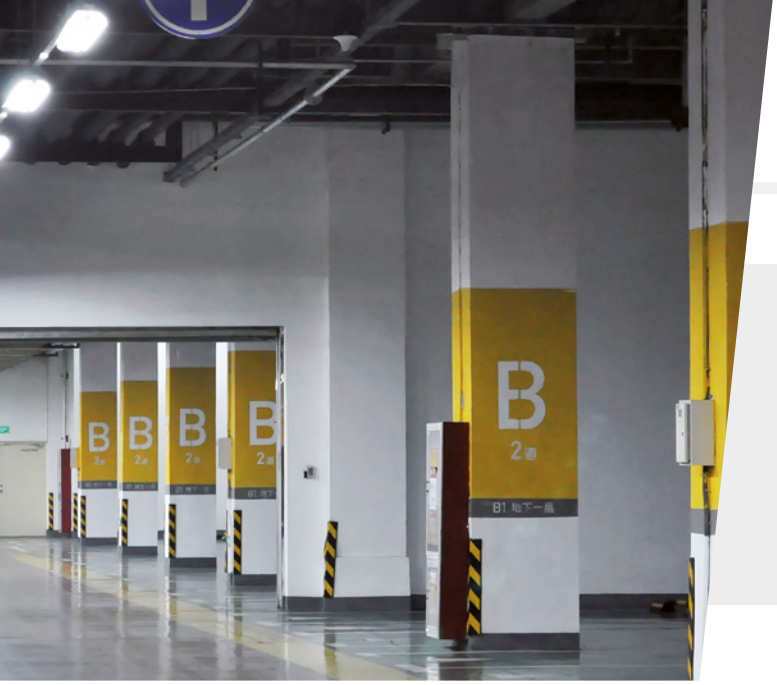

SOLUTIONS IN **DESIGN**

EXTERNAL AIR **INLET**

The external air inlet must be far from areas where there is a risk of fire, to ensure the entry of clean air through the pressurisation system.

If the installation is mounted on the roof, two air inlets will be required located far from each other and pointing in different directions, equipped with a motorised damper with a smoke detector (DAMPER BOX) that will close the air inlet when smoke is detected.

If by the contrary, the installation is mounted on the bottom floor, a single air inlet will be required, also equipped with a motorised damper with a smoke detector (DAMPER BOX).

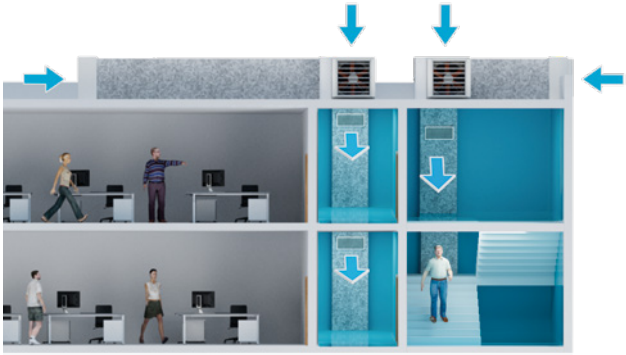

PRESSURISATION OF LOBBIES

JOINT PRESSURISATION OF ALL LOBBIES

When lobbies have very few air outlets (when for example, no lift shafts are present) or when the building has just a few floors, all lobbies may be pressurised at the same time (as long as the compartmentalisation is respected), without needing to consider the floor where the fire has broken out (in addition to the staircase), and it is always recommended that the pressurisation of the lobbies be carried out with a different pressurisation kit than the one used for the staircase.

The pressurisation solutions provided by SODECA offer different types of equipment to satisfy the needs of the installation.

To select the most suitable equipment, it is important to have previously defined how the outside air is going to be suctioned and supplied to the pressurised area and follow the recommendations provided below:

PRESSURISATION OF LOBBIES

INDIVIDUAL PRESSURISATION OF LOBBIES

When lobbies have a large amount of air escaping primarily through lift shafts, or when the building has many floors, an efficient solution is to design a system that will only pressurise the lobby of the floor affected by the fire (in addition to the staircase).

PDS LOBBY CONTROL
These systems require the installation of a control panel for pressurising each lobby PDS LOBBY CONTROL, with all of them connected to the lobby's OVERPRESSURE KIT.

SMOKE CONTROL DAMPER
In addition to measuring and transmitting the lobby's overpressure level so the OVERPRESSURE KIT can control its flow, the PDS LOBBY CONTROL is capable of controlling the opening of the smoke control damper to supply air to the lobby of the floor affected by the fire, and also control the opening of the smoke control damper so air/smoke can exhaust from said floor.

VERY TALL BUILDINGS

In very tall buildings, the differential pressure along the height of the staircase with respect to the outside (stratification) must take into account, which may be caused by a difference in temperature between the inside and outside of the building.

The differential pressures that are present may cause air leaks from the occupied areas towards the evacuation routes and vice versa, depending on the differential pressure that exists.

Pressurisation solutions for very tall buildings may require:

SEVERAL OVERPRESSURE KITS
To control the different staircase areas, connected for coordination between them.

REVERSIBLE OVERPRESSURE KITS
To relieve overpressure if required.

MULTIPLE DIFFERENTIAL PRESSURE SENSORS
Connected to the overpressure kits.

MOTORISED AIR SUPPLY DAMPERS
Proportional for local overpressure regulation.

PRESSURISATION
AIR EXHAUST

Any overpressure system requires an air exhaust path connected to the floor affected by the fire, for example, through smoke control dampers connected to a vertical duct that communicates all floors.

SMOKE CONTROL DAMPER

The smoke control dampers by SODECA, SCDLM-MA or SCDLS-MA (depending on whether they are for multiple or single compartments), are suitable to perform this function.

In the event of a fire, the smoke control damper of the affected floor must be opened to allow air to escape, with the hatches of the rest of the floors remaining closed, which is accomplished by installing a PDS LOBBY CONTROL sub-panel on each floor that will control each damper as well as control the overpressure of the lobby if necessary, all in coordination with the overpressure kits; BOXPDS KIT and BOXPDS SMART KIT.

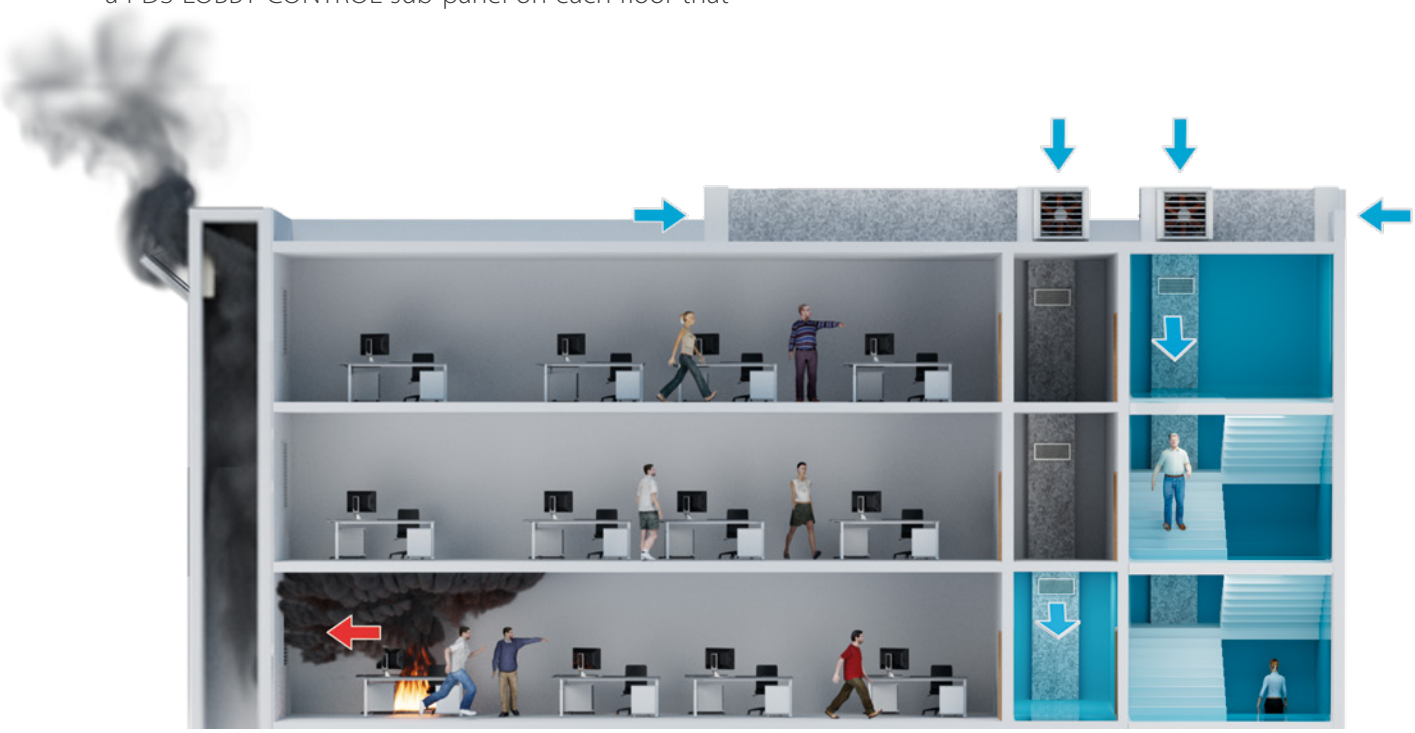

EVACUATION GALLERIES IN **TUNNELS**

Evacuation galleries, interconnecting galleries, passageways, staircases, lifts and lobbies are all considered escape routes.

Tunnel evacuation routes play an important role in safety, due to their specific constructive features.

The pressurisation systems of evacuation galleries in tunnels have specific requirements for each configuration:

OVERPRESSURE KITS **FOR DUAL SYSTEMS**

Pressurisation of interconnecting galleries in dual-tube tunnels. Equipped with an automatically actuated dual pressurisation system in the area affected by the fire.

OVERPRESSURE KITS **WITH BUILT-IN COMPARTMENTALISATION DAMPER**

Overpressure kit with smoke control damper and fire resistant with compartmentalising capability. The damper along with the rest of the system elements are controlled by the overpressure kit itself.

OVERPRESSURE KITS **WITH STANDBY FAN**

To automatically activate the standby fan in the event of a main fan failure.

BMS OR SCADA CONNECTION
Remote connection to view the condition of all equipment and remote control panel for fire-fighters or other users, depending on the model.

EVACUATION STAIRCASES
IN RAILWAY OR HIGHWAY TUNNELS

EVACUATION AUXILIARY GALLERIES IN **RAILWAY OR HIGHWAY** TUNNELS

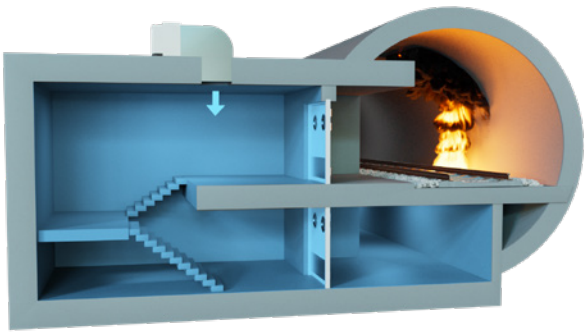

INTERCONNECTION GALLERIES
IN DUAL-TUBE TUNNELS

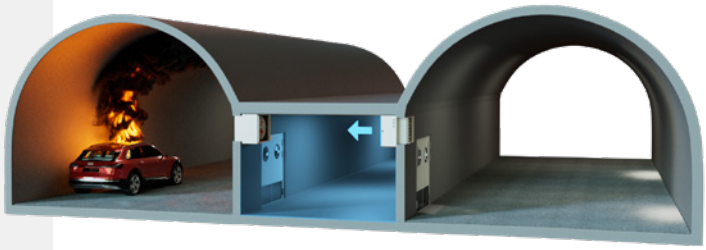

INSTALLATION
EXAMPLES

ROOF INSTALLATION

KIT BOXPDS

KIT BOXSMART

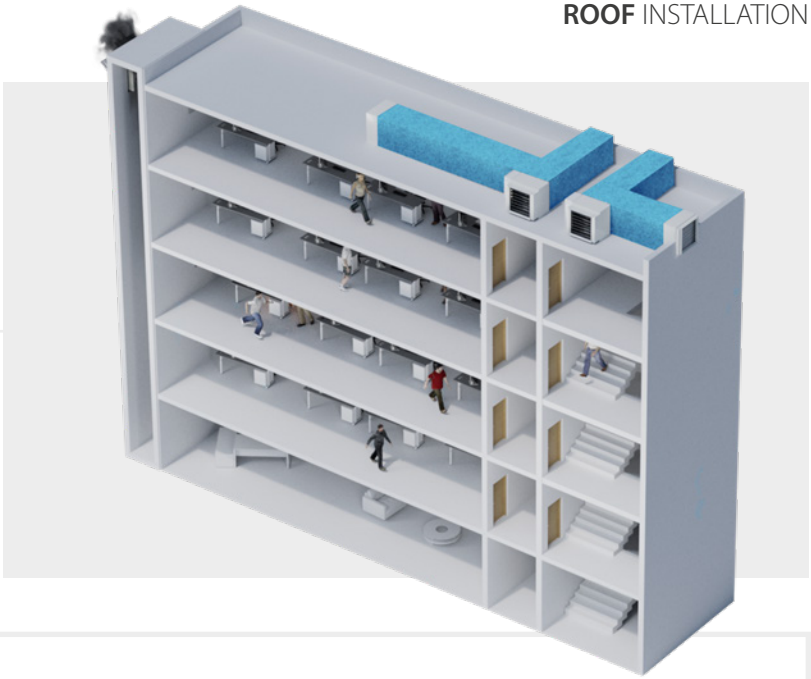

DAMPER BOX /
DAMPER BOX SMART
Dual air inlet with motorised dampers equipped with a smoke detector to close the air inlet when smoke is detected.

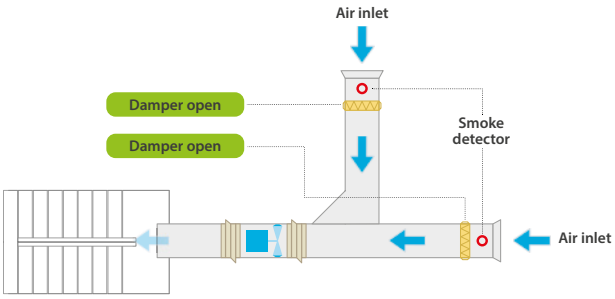

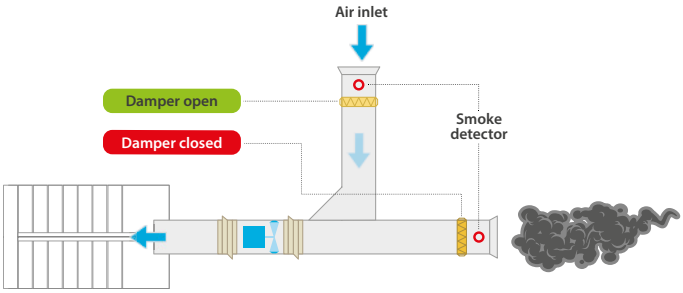

INSTALLATION **INDOORS**

KIT BOXPDS

KIT BOXPRES PLUS

KIT BOXSMART

INDEPENDENT **LOBBY**

PRESSKIT

KIT SOBREPRESIÓN

PDS LOBBY CONTROL

BMS
CONNECTIVITY

SODECA goes one step further, adapting to market requirements and offering a response to new technological demands. Our systems include advanced options and connectivity to facilitate the supervision and maintenance of the equipment, once installed in any building.

Any BMS (Building Management System) system can be connected to our equipment via the Modbus protocol, allowing end users or maintenance services to supervise the status and correct operation of the systems at all times.

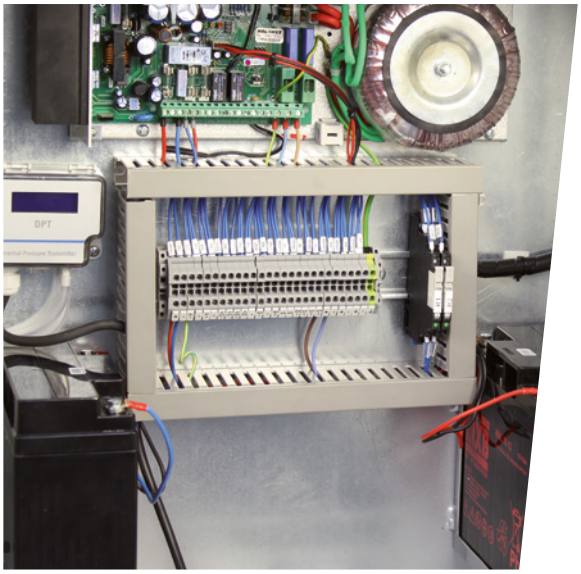

REAL LIFE SIMULATION
TESTS

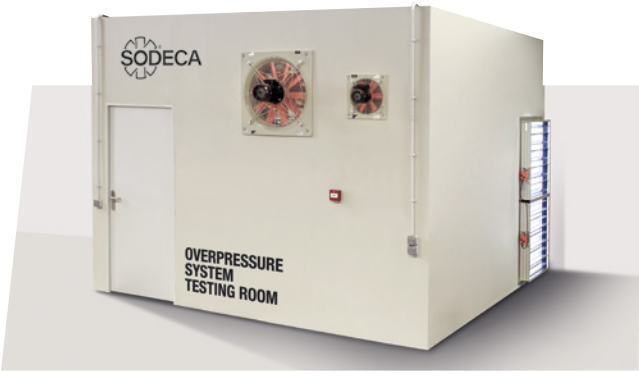

Outside view

Interior view

View of motorised damper

All equipment manufactured by SODECA are subjected to rigorous testing in real life simulation environments.

We have a **test chamber** with fireproof doors, motorised dampers for simulating leaks and simulating the timed opening/closing of doors.

The most advanced **overpressure kits** have been tested following the same principles and for the same aerodynamic performance behaviour as the new standard EN 12101-6:2022.

Equipment certified by independent laboratories:

ISTITUTO GIORDANO
Qualità al Plurale.

Certificate: NR331151

SODECA NATIONAL TECHNICAL ASSESTMENT
KOT-ITB-2017/0092

PRESSURISATION CONTROL SYSTEMS

FOR STAIRCASES, LOBBIES AND ESCAPE ROUTES

FULL RANGE

KIT HATCH PDS

KIT BOXPDS /
KIT BOXPDS SMART

PDS LOBBY CONTROL

ADVANCED

KIT BOXSMART

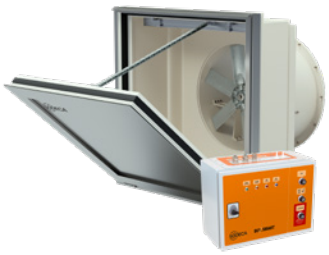

KIT BOXSMART FLAP

KIT BOXSMART EC

BASIC

KIT BOXPRES PLUS

KIT SOBREPRESIÓN

PRESSKIT

	FULL RANGE			ADVANCED			BASIC		
	KIT HATCH PDS	KIT BOXPDS SMART KIT BOXPDS SMART II	KIT BOXPDS KIT BOXPDS II	KIT BOXSMART KIT BOXSMART II	KIT BOXSMART FLAP	KIT BOXSMART EC	KIT BOXPRES PLUS KIT BOXPRES PLUS II	KIT SOBREPRESIÓN	PRESSKIT
APPLICATIONS	Staircases, passageways, lift shafts, lobbies								Lobbies
INSTALLATION	Roofs	Roofs, interiors							Only lobbies
NO/NC SELECTABLE ACTIVATION CONTACT	YES	YES	YES	YES	YES	YES	-	-	YES
OPERATES IN THE EVENT OF LOSS OF ACTIVATION SIGNAL	YES	YES	YES	YES	YES	YES	YES	-	YES
STATUS MEMORY IN THE EVENT OF A LOSS OF POWER	YES	YES	YES	YES	YES	-	-	-	YES
EQUIPMENT STATUS INDICATOR LIGHTS	YES	YES	YES	YES	YES	YES	YES	YES	YES
EQUIPMENT STATUS INFORMATION SIGNALS	YES	YES	YES	YES	YES	YES	YES	-	YES
REMOTE RESET	YES	YES	YES	YES	YES	-	-	-	YES
DAILY VENTILATION OPTION	YES	YES	YES	YES	YES	YES	-	-	-
BUILT-IN CONTROL PANEL	YES	YES	YES	YES	YES	YES	YES	-	-
CONTROL OF MULTIPLE INDEPENDENT LOBBIES	YES	YES	YES	-	-	-	-	-	-
REVERSIBLE FOR SMOKE EXTRACTION	-	YES	-	-	YES	-	-	-	-
STANDBY FAN	-	YES	YES	YES	-	-	YES	YES	-
COMPATIBLE WITH FIRE-FIGHTER CONTROL PANEL	YES	YES	YES	YES	YES	YES	YES	-	-
INLET SMOKE DETECTION	YES	YES	YES	YES	-	-	-	-	-
INLET MOTORISED HATCH CONTROL	1	3	2	1/2	1	-	-	-	-
SELF-CALIBRATION AND LEAK DETECTION	YES	YES	YES	-	-	-	-	-	-
QUICK SETUP	-	YES	-	-	-	-	-	-	-
CONNECTION TO BMS SYSTEMS	YES	YES	YES	YES	YES	YES	YES	YES	YES
TOUCH SCREEN FOR PROGRAMMING PARAMETERS	YES	YES	YES	-	-	-	-	-	YES
MENU FOR CHECKING SYSTEM COMPONENTS	YES	YES	YES	-	-	-	-	-	-
TEST SELECTOR FOR STARTING THE FAN	-	YES	-	YES	YES	YES	YES	YES	-
ALARMS MENU	YES	YES	YES	-	-	-	-	-	YES
DUAL SPACE OVERPRESSURE CONTROL	-	YES	-	-	-	-	-	-	-
CONFIGURABLE MODE TO CLOSE EXIT DOOR	-	YES	-	-	-	-	-	-	-
VENTILATION OPTION WITH ENVIRONMENTAL SENSORS	-	YES	-	-	-	-	-	-	-

OVERPRESSURE KITS
ACCESSORIES

FIRE-FIGHTERS CONTROL PANEL
CM-SMART External control panel for fire-fighters

The function of the CM-SMART is to indicate the system status and provide fire-fighters with the option of manually turning the system on or off via its selector.

We recommend installing this panel at the main entryway to the area protected by the pressurisation system.

- Accessory compatible with BOXPRES PLUS and BOXSMART models.
- The BOXSMART FLAP models are compatible with CM-SMART FLAP.

BOXPDS EXTERNAL CONTROL PANEL
Included in the BOXPDS KIT, BOXPDS SMART KIT, and HATCH/PDS

With touch screen for real-time viewing of pressure, system configuration and calibration, alarm pilot lamps and manual system activation.

- Auto-Manual-Off Selector.
- Fire alarm Reset Selector.
- Test Selector.

MOTORISED OUTSIDE AIR INLET
DAMPER BOX/ DAMPER BOX SMART

Outside air inlet, with motorised damper and smoke detector.

To remain closed in standby situations, open automatically in the event of activation of the pressurisation system and close quickly in the event that smoke is detected.

SMOKE CONTROL DAMPER

Smoke control dampers SODECA SCDLMMA or SCDLS-MA (depending on if there are multiple compartments or just a single compartment), can be used to exhaust air, supply air to lobbies, or if required, to separate the overpressure kit air inlet.

OVERPRESSURE CALCULATION IN STAIRCASES AREAS

Make it easy with QuickFan!

QUICKFAN, THE SOFTWARE USED FOR MAKING CALCULATIONS AND DESIGNING VENTILATION PROJECTS

—

TOOL FOR ENGINEERS
AND TECHNICAL DEPARTMENTS

QUICKFAN
SODECA SELECTOR

Available in:

Windows

Selecting the most suitable product for your ventilation installation is now easier than ever

Through the projects module for QuickFan and by downloading the designs in CAD 3D or REVIT, you can design ventilation projects, make calculations and obtain full technical reports in just a few minutes

Easy search

Personalised reports

Always updated

Reports in minutes

SODECA®

FULL RANGE PRESSURISATION SYSTEMS

32 **KIT BOXPDS**
Evacuation route pressurisation systems with test certificate according to the European standard EN 12101-6:2022

35 **KIT BOXPDS SMART**
Evacuation route pressurisation systems with advanced control and test certificate according to the European standard EN 12101-6:2022

32 **KIT BOXPDS II**
Evacuation route pressurisation systems with standby fan and test certificate according to the European standard EN 12101-6:2022

35 **KIT BOXPDS SMART II**
Evacuation route pressurisation systems with advanced control, standby fan and test certificate according to the European standard EN 12101-6:2022

38 **HATCH PDS**
Equipment for pressurizing evacuation routes in the event of fire, designed according to the European standard EN 12101-6

ADVANCED PRESSURISATION SYSTEMS

41 **KIT BOXSMART**
Pressurisation system for stairs or evacuation routes, designed according to the European standard EN 12101-6

41 **KIT BOXSMART II**
Pressurisation system for stairs or evacuation routes, designed according to the European standard EN 12101-6

48 **KIT BOXSMART EC**
Pressurisation system for stairs or evacuation routes, designed according to the European standard EN 12101-6

52 **KIT BOXSMART FLAP**
Pressurisation system for stairs or evacuation routes, designed according to the European standard EN 12101-6

45 **BOXSMART**
Control panel for a fan

45 **BOXSMART II**
Control panel with standby fan

50 **BOXSMART EC**
Control panel for an EC motor fan

55 **BOXSMART FLAP**
Control panel with damper fan

BASIC PRESSURISATION SYSTEMS

57 **KIT SOBREPRESIÓN**
Pressurisation system for stairs or evacuation routes, designed according to the European standard EN 12101-6

61 **KIT BOXPRES PLUS**
Pressurisation system for stairs or evacuation routes, designed according to the European standard EN 12101-6

63 **PRESSKIT**
Pressurisation equipment for lobbies, compliant with DM 30/11/1983 and designed according to the European standard EN 12101-6

65 **BOXPRES PLUS**
Control panel for a fan

65 **BOXPRES PLUS II**
Control panel with standby fan

ACCESSORIES

68 **PDS LOBBY CONTROL**
Control panel and independent automatic regulation for lobby pressurisation systems

70 **DAMPER BOX**
Motorised damper with built-in optical smoke detector for pressurization systems

70 **DAMPER BOX SMART**
Motorised damper with built-in optical smoke detector for pressurization systems

71 **SCDLS-MA**
Single compartment smoke control dampers with manual and automatic operation

72 **SCDRS-MA**
Single compartment circular smoke control dampers with manual or automatic operation

73 **SCDLM-MA**
Multi-compartment smoke control dampers with manual and automatic activation

KIT BOXPDS

Evacuation route pressurisation systems with test certificate according to the European standard EN 12101-6:2022

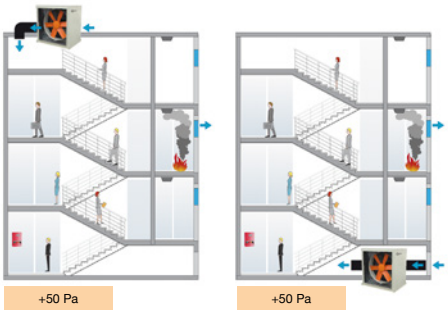

System with test certification according to the requirements of the European standard EN 12101-6:2022, and additional tests for electromagnetic compatibility, environmental resistance and IP protection degree.

The KIT BOXPDS automatically regulates the airflow and is able to maintain the 50 Pa of overpressure (or required pressure according to design calculations) even in the presence of leaks in the installation. The system is able to maintain the overpressure (Pressure criteria) and reach the 90% of the required flow rate within 3 seconds after opening or closing a door (Airflow criteria).

Utility model: ES 1 226 660 U.

KIT BOXPDS
- Consists of the BOXPDS control panel, external control panel, a CJHCH ventilation unit and a DAMPER BOX with built-in optical smoke detector.

BOXPDS
- Variable frequency drive.
- High precision differential pressure probe.
- Electrical panel with magneto thermal protections and general power supply failure indication.
- Electronic control for alarm management, maintenance, ModBUS RTU and TCP port for connection to BMS (Building Management Systems) and control by DAMPER BOX.
- Certified power supply with batteries to ensure power supply to control equipment in the event of a power failure.

Control panel:
- External control panel with touch screen for real time pressure display, system configuration and calibration, status lights and manual system activation.
- Auto-Manual-Off selector.
- Fire alarm reset selector.
- Test selector.

On request:
- Time programming to activate daily ventilation.
- Automatic switching system for backup fan (see KIT BOXPDS II series).

- Easy to install.
- A compact, autonomous solution.
- Easy start-up.
- Safe, functional installation.

Order code

KIT BOXPDS — 800 — 4T — 5.5

- KIT BOXPDS: Evacuation route pressurisation systems with test certificate according to the European standard EN 12101-6:2022
  KIT BOXPDS II: Evacuation route pressurisation systems with standby fan and test certificate according to the European standard EN 12101-6:2022
- 800: Impeller diameter in cm
- 4T: Number of motor poles 4=1400 r/min 50 Hz
- T = Three-phase
- 5.5: Motor power (HP)

Technical characteristics

Model	Speed (r/min)	Power supply (V) (Hz)	Maximum admissible current (A) 400V	Installed power (kW)	Maximum flow rate (m^3/h)	Sound pressure level dB (A)	Approx. weight (Kg)
KIT BOXPDS-710-4T-1.5 IE3	1400	380-480 V 50/60 Hz	4.75	1.1	19770	75	188
KIT BOXPDS-710-4T-2 IE3	1430	380-480 V 50/60 Hz	6.25	1.5	21090	75	191
KIT BOXPDS-710-4T-3 IE3	1445	380-480 V 50/60 Hz	8.20	2.2	23970	78	200
KIT BOXPDS-800-4T-3 IE3	1445	380-480 V 50/60 Hz	8.20	2.2	27940	79	208
KIT BOXPDS-800-4T-4 IE3	1445	380-480 V 50/60 Hz	10.05	3.0	32720	80	210
KIT BOXPDS-800-4T-5.5 IE3	1440	380-480 V 50/60 Hz	12.65	4.0	37440	81	215
KIT BOXPDS-900-4T-7.5 IE3	1440	380-480 V 50/60 Hz	15.20	5.5	47550	88	309
KIT BOXPDS-900-4T-10 IE3	1455	380-480 V 50/60 Hz	20.30	7.5	53120	89	326
KIT BOXPDS-1000-4T-10 IE3	1455	380-480 V 50/60 Hz	20.30	7.5	58560	90	334
KIT BOXPDS-1000-4T-15 IE3	1460	380-480 V 50/60 Hz	28.30	11.0	68000	91	366
KIT BOXPDS-1000-4T-20 IE3	1460	380-480 V 50/60 Hz	36.60	15.0	71850	92	377

May be supplied with the KIT BOXPDS II for standby fan (a second impulsion unit is added to the KIT BOXPDS).

Dimensions mm

KIT BOXPDS

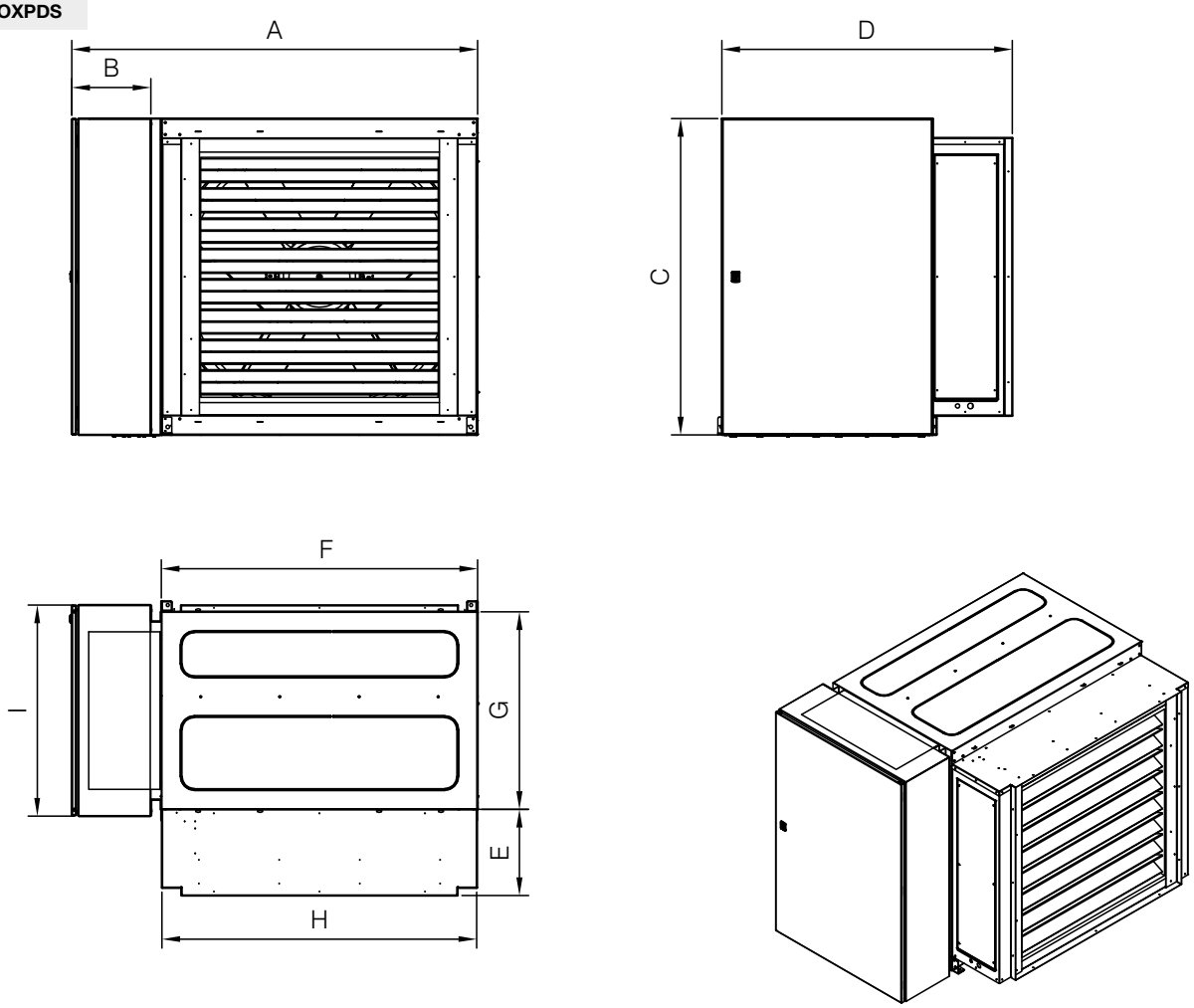

	A	B	C	D	E	F	G	H	I	J	K	L	O
KIT BOXPDS-710/800	1314	300	1000	976,5	326.5	1000	650	995	600	850	650	850	1000
KIT BOXPDS-900/1000	1540	300	1200	1102	326.5	1200	750	1195	800	1050	750	1050	1200

Dimensions mm

BOXPDS

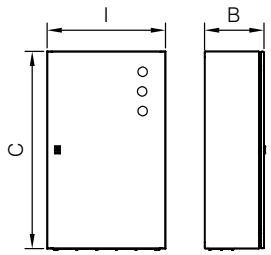

	C	B	I
BOXPDS-710/800	1000	300	600
BOXPDS-900/1000	1200	300	800

DAMPER BOX

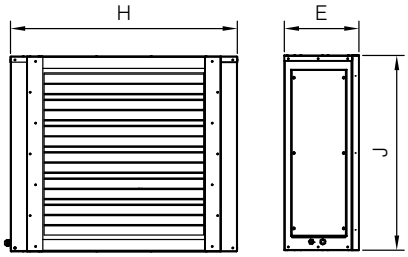

	E	J	H
DAMPER BOX 71/80	326.5	850	995
DAMPER BOX 90/100	326.5	1050	1195

CJHCH

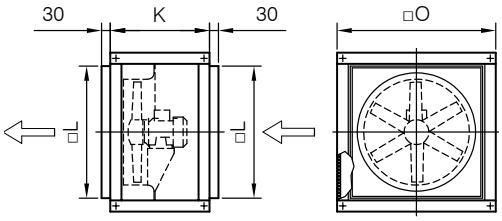

	O	K	L
CJHCH-71/80	1000	650	850
CJHCH-90/100	1200	750	1050

Application example

BOXPDS

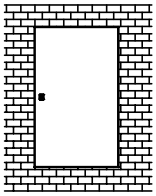

In technical room

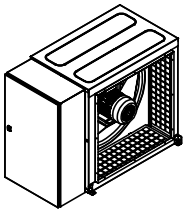

Next to ventilation unit

DAMPER BOX

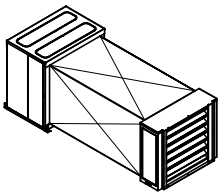

In intake conduit

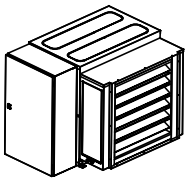

Next to ventilation unit

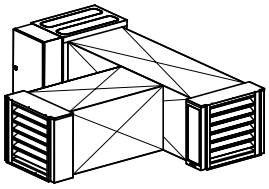

BOXPDS with additional damper

2 DAMPERS can be used by installing two inlets away from the fan, so that if smoke is detected at one inlet it will close and the second damper will be kept open to ensure the entry of clean air into the space to be protected (smoke-free evacuation route).

KIT BOXPDS II

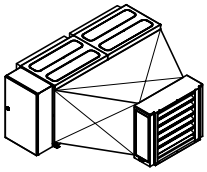

In parallel. Non-return shutter required for each fan (P-400 accessory not included in the KIT)

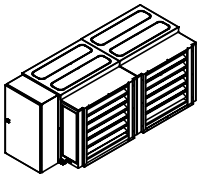

In parallel with additional damper and fan configuration

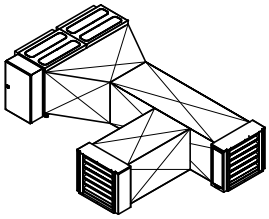

In parallel with additional damper and plenum configuration. Non-return shutter required for each fan (P-400 accessory not included in the KIT)

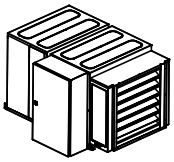

In series

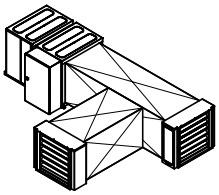

In series with additional damper

Accessories

PDS LOBBY CONTROL

DAMPER BOX

P-400

KIT BOXPDS SMART

Evacuation route pressurisation systems with advanced control and test certificate according to the European standard EN 12101-6:2022

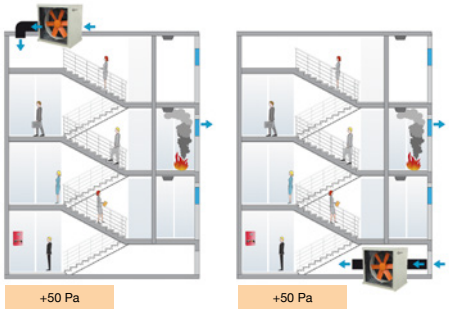

System with test certification according to the requirements of the European standard EN 12101-6:2022, and additional tests for electromagnetic compatibility, environmental resistance and IP protection degree.

The KIT BOXPDS SMART automatically regulates the airflow and is able to maintain the 50 Pa of overpressure (or required pressure according to design calculations) even in the presence of leaks in the installation. The system is able to maintain the overpressure (Pressure criteria) and reach the 90% of the required flow rate within 3 seconds after opening or closing a door (Airflow criteria).

Utility model: ES 1 226 660 U.

KIT BOXPDS SMART
- Device with advanced control, consisting of a BOXPDS SMART control panel, an external control panel, a CJHCH ventilation unit and a DAMPER BOX SMART with integrated optical smoke detector.

BOXPDS SMART
- Variable frequency drive.
- High precision differential pressure probe.
- Electrical panel with magneto thermal protections and general power supply failure indication.
- Electronic control for alarm management, maintenance, ModBUS RTU and TCP port for connection to BMS (Building Management Systems) and control by DAMPER BOX SMART.
- Certified power supply with batteries to ensure power supply to control equipment in the event of a power failure.
- Quick set up for intuitive configuration.
- Possibility of controlling 3 motorised air intakes of the DAMPER BOX SMART, HATCH or WALL type.
- Smoke detector with automatic reset.
- Pressurisation or despressurisation/ extraction mode.
- Possibility of connecting several pressure sensors for large stairwells and choosing the control mode: Maximum, minimum or average.
- External sensors connection: Humidity, temperature and wind.
- Includes time programming to activate daily ventilation.

Control panel:
- External control panel with touch screen for real time pressure display, system configuration and calibration, status lights and manual system activation.
- Possibility of connecting up to 3 KIT BOXPDS SMART.
- Auto-Manual-Off selector.
- Fire alarm reset selector.
- Test selector.

On request:
- Automatic switching system for backup fan (see KIT BOXPDS SMART II series).

- Easy to install.
- A compact, autonomous solution.
- Easy start-up.
- Safe, functional installation.

Order code

KIT BOXPDS SMART — 800 — 4T — 5.5

- KIT BOXPDS SMART: Evacuation route pressurisation systems with advanced control and test certificate according to the European standard EN 12101-6:2022
  KIT BOXPDS SMART II: Evacuation route pressurisation systems with advanced control, standby fan and test certificate according to the European standard EN 12101-6:2022
- 800: Impeller diameter in cm
- 4T: Number of motor poles 4=1400 r/min 50 Hz; T = Three-phase
- 5.5: Motor power (HP)

Technical characteristics

Model	Speed (r/min)	Power supply (V) (Hz)	Maximum admissible current (A) 400V	Installed power (kW)	Maximum flow rate (m³/h)	Sound pressure level dB (A)	Approx. weight (Kg)
KIT BOXPDS SMART-710-4T-1.5 IE3	1400	380-480 V 50/60 Hz	4.75	1.1	19770	75	188
KIT BOXPDS SMART-710-4T-2 IE3	1430	380-480 V 50/60 Hz	6.25	1.5	21090	75	196
KIT BOXPDS SMART-710-4T-3 IE3	1445	380-480 V 50/60 Hz	8.20	2.2	23970	78	205
KIT BOXPDS SMART-800-4T-3 IE3	1445	380-480 V 50/60 Hz	8.20	2.2	27940	79	213
KIT BOXPDS SMART-800-4T-4 IE3	1445	380-480 V 50/60 Hz	10.05	3.0	32720	80	215
KIT BOXPDS SMART-800-4T-5.5 IE3	1440	380-480 V 50/60 Hz	12.65	4.0	37440	81	220
KIT BOXPDS SMART-900-4T-7.5 IE3	1440	380-480 V 50/60 Hz	15.20	5.5	47550	88	314
KIT BOXPDS SMART-900-4T-10 IE3	1455	380-480 V 50/60 Hz	20.30	7.5	53120	89	331
KIT BOXPDS SMART-1000-4T-10 IE3	1455	380-480 V 50/60 Hz	20.30	7.5	58560	90	339
KIT BOXPDS SMART-1000-4T-15 IE3	1460	380-480 V 50/60 Hz	28.30	11.0	68000	91	371
KIT BOXPDS SMART-1000-4T-20 IE3	1460	380-480 V 50/60 Hz	36.60	15.0	71850	92	382

May be supplied with the KIT BOXPDS SMART II for standby fan (a second impulsion unit is added to the KIT BOXPDS SMART).

Dimensions mm

KIT BOXPDS SMART

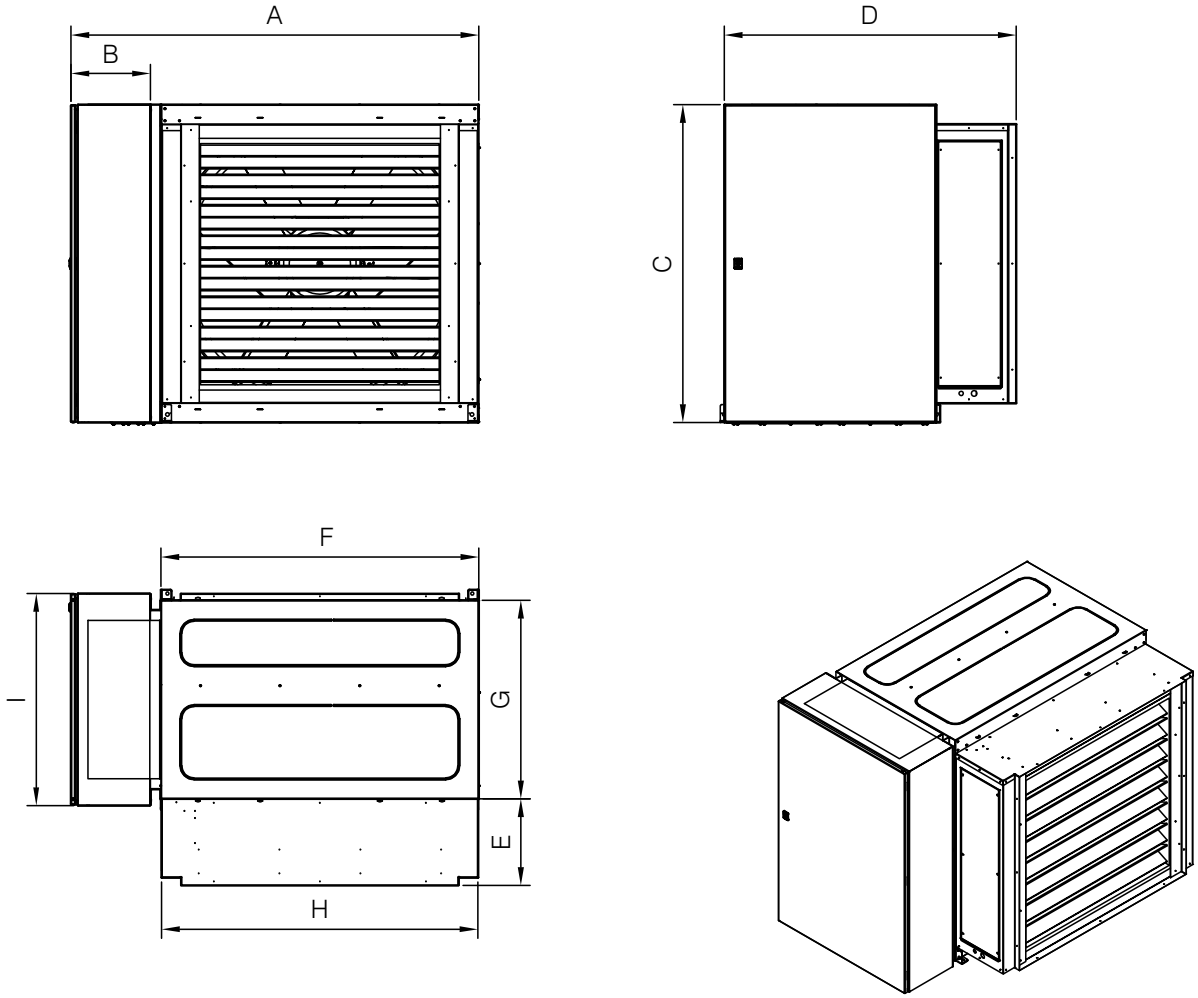

	A	B	C	D	E	F	G	H	I	J	K	L	O
KIT BOXPDS SMART-710/800	1400	400	1000	1000	350	1000	650	995	600	850	650	850	1000
KIT BOXPDS SMART-900/1000	1600	400	1200	1125	350	1200	750	1195	800	1050	750	1050	1200

Dimensions mm

BOXPDS SMART

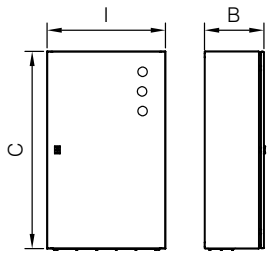

DAMPER BOX SMART

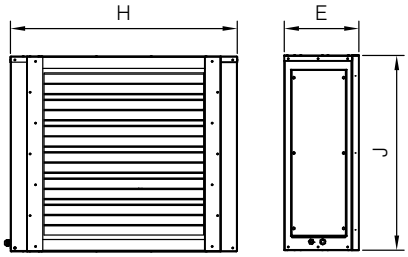

CJHCH

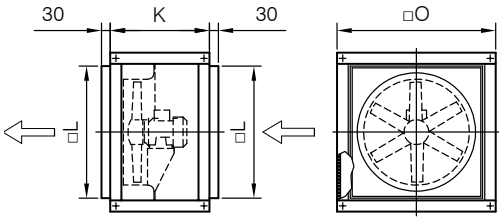

	C	B	I
BOXPDS SMART--710/800	1000	400	600
BOXPDS SMART--900/1000	1200	400	800

	E	J	H
DAMPER BOX SMART 71/80	350	850	995
DAMPER BOX SMART 90/100	350	1050	1195

	O	K	L
CJHCH-71/80	1000	650	850
CJHCH-90/100	1200	750	1050

Application example

BOXPDS SMART

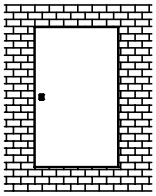

In technical room

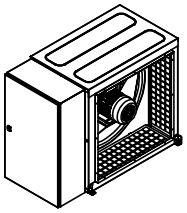

Next to ventilation unit

DAMPER BOX SMART

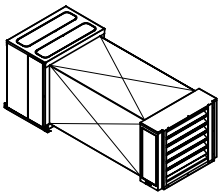

In intake conduit

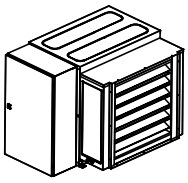

Next to ventilation unit

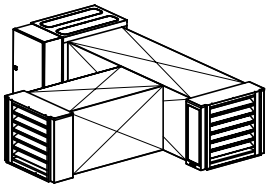

BOXPDS with additional damper

2 DAMPERS can be used by installing two inlets away from the fan, so that if smoke is detected at one inlet it will close and the second damper will be kept open to ensure the entry of clean air into the space to be protected (smoke-free evacuation route).

KIT BOXPDS SMART II

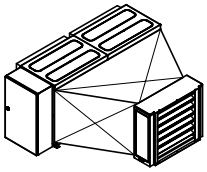

In parallel. Non-return shutter required for each fan (P-400 accessory not included in the KIT)

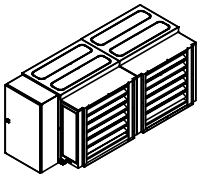

In parallel with additional damper and fan configuration

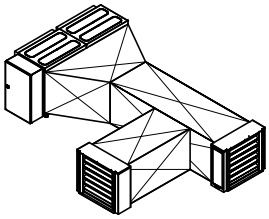

In parallel with additional damper and plenum configuration. Non-return shutter required for each fan (P-400 accessory not included in the KIT)

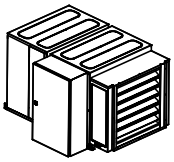

In series

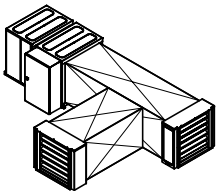

In series with additional damper

Accessories

PDS LOBBY CONTROL

DAMPER BOX SMART

P-400

HATCH PDS

Equipment for pressurizing evacuation routes in the event of fire, designed according to the European standard EN 12101-6

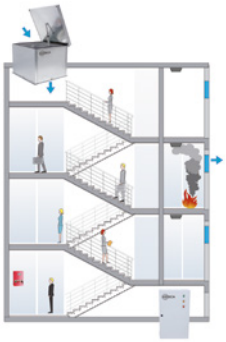

+50 Pa

HATCH PDS
- Consists of a HATCH ventilation unit with motorised damper opening and a BOXPDS control panel.
- An extremely robust structure that is able to withstand severe weather changes.
- Equipment structure made of anti-corrosive galvanised sheet steel.
- Designed to ensure watertightness.
- Thermal insulation to avoid losses of hot air in winter.
- Adapter socket (or skirting) for correct and easy installation on the roof.
- Built-in analog smoke detector.
- Utility model: ES 1 226 660 U.

Opening system:
- Motorised opening arm, with encapsulated IP65 mechanism.
- System reinforced and guaranteed with more than 11,000 cycles.
- Snow load SL 1000.

Fan:
- HCT series extract fans.
- Tubular casing in sheet steel with polyester resin anti-corrosive treatment.
- Cast aluminium impellers.

Motor:
- Motors with IE3 efficiency for powers equal to or greater than 0.75 kW, except single-phase, 2-speed and 8-pole.
- Class F motors with ball bearings and IP55 protection.
- Three-phase 230/400 V 50 Hz (up to 4 kW) and 400/690 V 50 Hz (powers greater than 4 kW).
- Working temperature: -25 ºC +50 ºC.

Finish:
- Galvanised steel sheet.

On request:
- Fitted with F300 and F400 rated fans.
- Reversible pressurisation equipment for smoke exhaust in case of need.
- Polyester resin anti-corrosive paint finish.
- Protection grille against contact according to UNE-EN ISO 12499 for inlet and/or outlet.

BOXPDS
- Variable frequency drive.
- High precision differential pressure probe.
- Electrical panel with magneto thermal protections and general power supply failure indication.
- Electronic control for alarm management, maintenance, ModBUS RTU port for connection to BMS (Building Management Systems).
- Certified power supply with batteries to ensure power supply to control equipment in the event of a power failure.
- Includes time programming to activate daily ventilation.

Control panel:
- External control panel for real time pressure display, alarm pilots and manual activation of the system.

Order code

HATCH PDS — 80 — 4T — 5.5 — G

- **HATCH PDS**: HATCH PDS: Equipment for pressurizing evacuation routes in the event of fire, designed according to the European standard EN 12101-6
- **80**: Size
- **4T**: Number of motor poles
  2=2900 r/min 50 Hz
  4=1400 r/min 50 Hz
  6=900 r/min 50 Hz
  T = Three-phase
- **5.5**: Motor power (HP)
- **G**: Finish
  G=galvanised
  P=painted in special colour

Technical characteristics

Model	Speed	Maximum admissible current (A)			Installed power	Blade tilt angle	Maximum flow rate	Sound pressure level dB (A)		Approx. weight
	(r/min)	230V	400V	690V	(kW)	(º)	(m³/h)	Inlet	Exhaust	(Kg)
HATCH PDS-40-2T-1 IE3	2850	2.80	1.62		0.75	16	6100	62	62	184
HATCH PDS-40-2T-1.5 IE3	2880	4.03	2.34		1.10	20	7040	61	61	188
HATCH PDS-45-2T-2 IE3	2880	5.34	3.07		1.50	16	9400	61	61	193
HATCH PDS-45-2T-3 IE3	2840	7.32	4.21		2.20	22	11325	61	61	194
HATCH PDS-50-2T-4 IE3	2880	10.00	5.77		3.00	16	13860	66	66	206
HATCH PDS-50-2T-5.5 IE3	2900	13.00	7.50		4.00	20	15918	66	66	222
HATCH PDS-56-2T-5.5 IE3	2870	13.00	7.50		4.00	16	18820	68	68	226
HATCH PDS-56-2T-7.5 IE3	2910		10.10	5.86	5.50	22	22510	68	68	237
HATCH PDS-56-4T-2 IE3	1440	5.41	3.11		1.50	36	15025	54	54	205
HATCH PDS-63-4T-3 IE3	1425	7.93	4.56		2.20	32	22170	58	58	262
HATCH PDS-63-4T-4 IE3	1430	10.70	6.15		3.00	38	24240	59	59	271
HATCH PDS-63-6T-1 IE3	940	3.36	1.93		0.75	38	15890	48	48	252
HATCH PDS-80-4T-3 IE3	1425	7.93	4.56		2.20	12	25460	65	65	280
HATCH PDS-80-4T-4 IE3	1430	10.70	6.15		3.00	16	30270	64	64	289
HATCH PDS-80-4T-5.5 IE3	1440	13.90	8.00		4.00	18	32770	63	63	295
HATCH PDS-80-4T-7.5 IE3	1460		10.30	5.97	5.50	26	39640	63	63	311
HATCH PDS-80-6T-1.5 IE3	945	4.68	2.69		1.10	18	21470	53	53	279
HATCH PDS-80-6T-2 IE3	945	6.43	3.70		1.50	26	25970	54	54	288
HATCH PDS-90-4T-7.5 IE3	1460		10.30	5.97	5.50	18	46140	67	67	392
HATCH PDS-90-4T-10 IE3	1460		13.90	8.06	7.50	22	50140	66	66	403
HATCH PDS-90-4T-15 IE3	1460		20.90	12.10	11.00	30	59390	68	68	456
HATCH PDS-90-6T-3 IE3	950	9.08	5.22		2.20	24	34000	56	56	365
HATCH PDS-90-6T-4 IE3	970	12.00	6.91		3.00	30	38910	59	59	391
HATCH PDS-100-4T-10 IE3	1460		13.90	8.06	7.50	16	57420	69	69	413
HATCH PDS-100-4T-15 IE3	1460		20.90	12.10	11.00	22	66300	69	69	466
HATCH PDS-100-6T-5.5 IE3	970	15.60	8.99		4.00	26	47780	60	60	413
HATCH PDS-100-6T-7.5 IE3	970		11.20	6.49	5.50	32	53520	62	62	420

* The noise level values are pressures in dB(A) measured at a distance of 10 metres in a free field.

Technical characteristics of the dynamic exhaust system based on standards EN-12101-3

Model	Approval	Motor insulation class	Durability	Temperature room temperature	Wind load	Snow load
	(ºC)				(Pa)	(Pa)
HATCH PDS	-	Class F	RE 11000	-25	WL 200	SL 1000

Acoustic characteristics

Sound power spectrum Lw(A) in dB(A) per Hz frequency band

Values measured at inlet with maximum flow rate

	63	125	250	500	1000	2000	4000	8000
40-2-1	48	64	76	84	89	87	83	76
40-2-1.5	47	63	75	83	88	86	82	75
45-2-2	47	60	74	86	87	86	82	74
45-2-3	47	64	74	81	88	86	83	75
50-2-4	58	74	84	91	92	89	88	89
50-2-5.5	58	74	84	91	92	89	88	89
56-2-5.5	53	66	84	92	94	93	88	81
56-2-7.5	53	66	84	92	94	93	88	81
56-4-2	52	64	73	79	79	79	73	65
63-4-3	56	68	77	83	83	83	77	69
63-4-4	57	69	78	84	84	84	78	70
63-6-1	49	59	69	73	74	72	65	57
80-4-3	55	71	84	91	91	88	82	74
80-4-4	54	70	83	90	90	87	81	73
80-4-5.5	53	69	82	89	89	86	80	72
80-4-7.5	53	69	82	89	89	86	80	72
80-6-1.5	53	68	75	78	79	76	70	62
80-6-2	59	69	75	79	80	78	73	65
90-4-7.5	59	75	86	92	93	91	86	78
90-4-10	58	74	85	91	92	90	85	77
90-4-15	60	76	87	93	94	92	87	79
90-6-3	52	67	78	82	82	78	71	63
90-6-4	60	70	80	85	85	82	76	68
100-4-10	64	80	87	94	95	93	89	81
100-4-15	71	83	87	93	94	94	91	83
100-6-5.5	57	72	82	85	86	83	75	67
100-6-7.5	59	74	84	87	88	85	77	69

Values measured at exhaust with maximum flow rate

	63	125	250	500	1000	2000	4000	8000
40-2-1	48	64	76	84	89	87	83	76
40-2-1.5	47	63	75	83	88	86	82	75
45-2-2	47	60	74	86	87	86	82	74
45-2-3	47	64	74	81	88	86	83	75
50-2-4	58	74	84	91	92	89	88	89
50-2-5.5	58	74	84	91	92	89	88	89
56-2-5.5	53	66	84	92	94	93	88	81
56-2-7.5	53	66	84	92	94	93	88	81
56-4-2	52	64	73	79	79	79	73	65
63-4-3	56	68	77	83	83	83	77	69
63-4-4	57	69	78	84	84	84	78	70
63-6-1	49	59	69	73	74	72	65	57
80-4-3	55	71	84	91	91	88	82	74
80-4-4	54	70	83	90	90	87	81	73
80-4-5.5	53	69	82	89	89	86	80	72
80-4-7.5	53	69	82	89	89	86	80	72
80-6-1.5	53	68	75	78	79	76	70	62
80-6-2	59	69	75	79	80	78	73	65
90-4-7.5	59	75	86	92	93	91	86	78
90-4-10	58	74	85	91	92	90	85	77
90-4-15	60	76	87	93	94	92	87	79
90-6-3	52	67	78	82	82	78	71	63
90-6-4	60	70	80	85	85	82	76	68
100-4-10	64	80	87	94	95	93	89	81
100-4-15	71	83	87	93	94	94	91	83
100-6-5.5	57	72	82	85	86	83	75	67
100-6-7.5	59	74	84	87	88	85	77	69

Dimensions mm

HATCH PDS

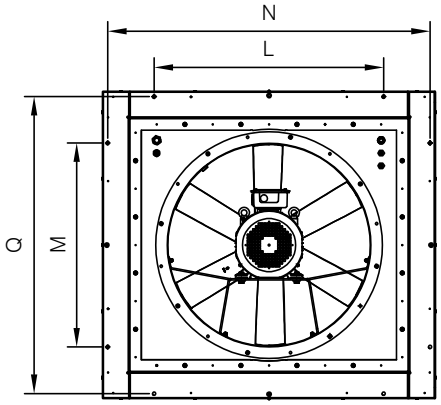

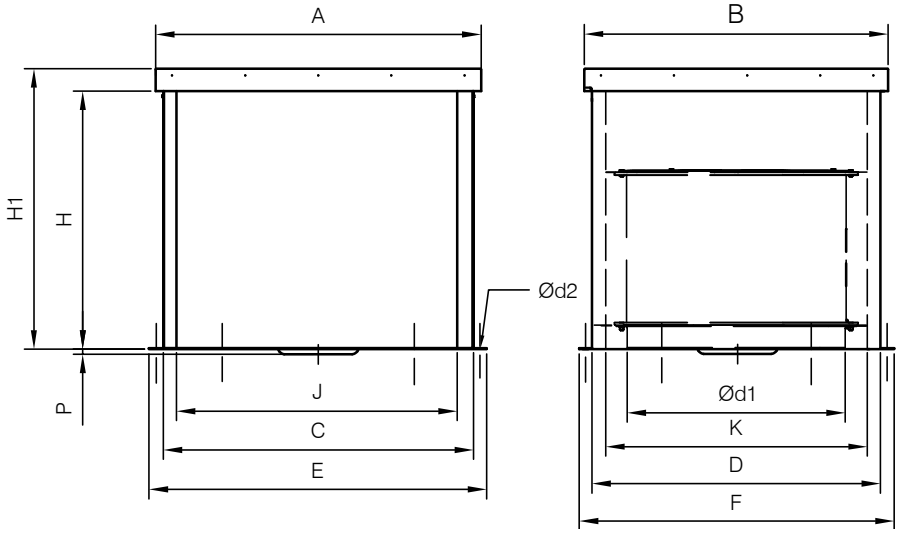

	A	B	C	D	ød1	Ød2	E	F	H	H1	J	K	L	M	N	P	Q
HATCH/PDS-40	1100	1000	1020	920	400	13	1100	1000	900	1000	900	800	700	600	1065	-	965
HATCH/PDS-45	1100	1000	1020	920	450	13	1100	1000	900	1000	900	800	700	600	1065	-	965
HATCH/PDS-50	1100	1000	1020	920	500	13	1100	1000	900	1000	900	800	700	600	1065	-	965
HATCH/PDS-56	1100	1000	1020	920	560	13	1100	1000	900	1000	900	800	700	600	1065	-	965
HATCH/PDS-63	1300	1200	1220	1120	630	13	1300	1200	900	1000	1100	1000	900	800	1265	-	1165
HATCH/PDS-80	1300	1200	1220	1120	800	13	1300	1200	900	1000	1100	1000	900	800	1265	-	1165
HATCH/PDS-90	1500	1400	1420	1320	900	13	1500	1400	900	1000	1300	1200	1100	1000	1465	-	1365
HATCH/PDS-90-4T-15	1500	1400	1420	1320	900	13	1500	1400	900	1000	1300	1200	1100	1000	1465	38	1365
HATCH/PDS-100	1500	1400	1420	1320	1000	13	1500	1400	900	1000	1300	1200	1100	1000	1465	-	1365
HATCH/PDS-100-4T-15	1500	1400	1420	1320	1000	13	1500	1400	900	1000	1300	1200	1100	1000	1465	80	1365

BOXPDS

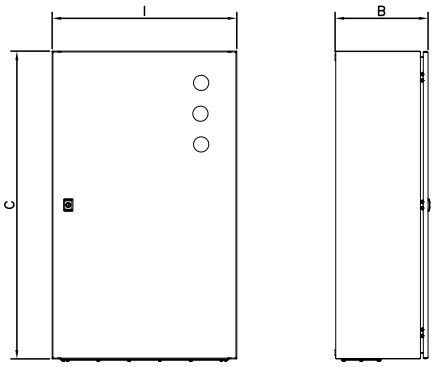

	I	B	C	Size
BOXPDS (0.75kW…4kW)	600	300	1000	1
BOXPDS (5.5kW…15kW)	800	300	1200	2

KIT BOXSMART
KIT BOXSMART II

Pressurisation system for stairs or evacuation routes, designed according to the European standard EN 12101-6

DAMPER BOX SMART motorised dampers included in the KIT

The correct operation of the pressurisation systems depends not only on their sound design, but also on the correct regulation performed by the system. For this reason, it is extremely important to have calibrated, high precision regulation elements that will permit both situations present in the event of a fire to be maintained simultaneously, quickly and stably.

KIT BOXSMART
- Overpressure kit for pressurizing stairs and evacuation routes, consisting of a control panel (BOXSMART), a fan unit (CJHCH or CJBD), and one or two motorised dampers with a smoke detector (DAMPER BOX SMART), depending on the selected model (1D or 2D).

KIT BOXSMART II
- Overpressure kit with backup fan, consisting of a control panel (BOXSMART II), which incorporates an automatic switching system to maintain overpressure in the event of failure of the main fan, and motorised dampers with smoke detector (DAMPER BOX SMART).

CM-SMART
- Supplied as an optional accessory.
- External control panel for firefighters.
- Indicates the system status and provides firefighters with the option of manually turning the system on or off via its selector switch. We recommend that this panel be installed at the main entry point to the protected area.

SI-CALENDAR
- Supplied as an optional accessory.
- Time programmer with calendar to manage the activation of the systems for daily ventilation.

- Easy to install.
- A compact, autonomous solution.
- Easy start-up.
- Safe, functional installation.

Order code

KIT BOXSMART — 7100 — 230 — 1D

- KIT BOXSMART: KIT BOXSMART: Overpressure unit; KIT BOXSMART II: Overpressure unit with standby fan
- 7100: Maximum flow rate (m^3/h)
- 230: 230: Single-phase 200 to 240 V 50/60 Hz input; 400: Three-phase 380 to 480 V 50/60 Hz input
- 1D: Dampers supplied: 1D: 1 DAMPER BOX SMART; 2D: 2 DAMPER BOX SMART

Technical characteristics

Model	Power (kW)	Power supply (V) (Hz)	Outlet (V)	Maximum flow rate (m^3/h)	Impulsion unit	Motorised inlet damper
KIT BOXSMART-2880 - 230V-1D	0,37	200-240 V AC II 50/60Hz	230 V AC II	2880	CJBD-2828-4M 1/2	DAMPER BOX SMART 56/63
KIT BOXSMART-7100 - 230V-1D	0,37	200-240 V AC II 50/60Hz	230 V AC III	7100	CJHCH-45-4T-0.5 IE3	DAMPER BOX SMART 56/63
KIT BOXSMART-7800 - 230V-1D	1,10	200-240 V AC II 50/60Hz	230 V AC III	7800	CJBD-3333-6T 1 1/2	DAMPER BOX SMART 56/63
KIT BOXSMART-12900 - 230V-1D	0,75	200-240 V AC II 50/60Hz	230 V AC III	12900	CJHCH-56-4T-1 IE3	DAMPER BOX SMART 56/63
KIT BOXSMART-17000 - 230V-1D	1,10	200-240 V AC II 50/60Hz	230 V AC III	1700	CJHCH-63-4T-1.5 IE3	DAMPER BOX SMART 56/63
KIT BOXSMART-7800 - 400V-1D	1,10	380-400 V AC III 50/60Hz	400 V AC III	7800	CJBD-3333-6T 1 1/2	DAMPER BOX SMART 56/63
KIT BOXSMART-12900 - 400V-1D	0,75	380-400 V AC III 50/60Hz	400 V AC III	12900	CJHCH-56-4T-1 IE3	DAMPER BOX SMART 56/63

Technical characteristics

Model	Power (kW)	Power supply (V) (Hz)	Outlet (V)	Maximum flow rate (m³/h)	Impulsion unit	Motorised inlet damper
KIT BOXSMART-17000 - 400V-1D	1,10	380-400 V AC III 50/60Hz	400 V AC III	1700	CJHCH-63-4T-1.5 IE3	DAMPER BOX SMART 56/63
KIT BOXSMART-21100 - 400V-1D	1,50	380-400 V AC III 50/60Hz	400 V AC III	21100	CJHCH-71-4T-2 IE3	DAMPER BOX SMART 71/80
KIT BOXSMART-2880 - 230V-2D	0,37	200-240 V AC II 50/60Hz	230 V AC II	2880	CJBD-2828-4M 1/2	DAMPER BOX SMART 56/63
KIT BOXSMART-7100 - 230V-2D	0,37	200-240 V AC II 50/60Hz	230 V AC III	7100	CJHCH-45-4T-0.5 IE3	DAMPER BOX SMART 56/63
KIT BOXSMART-7800 - 230V-2D	1,10	200-240 V AC II 50/60Hz	230 V AC III	7800	CJBD-3333-6T 1 1/2	DAMPER BOX SMART 56/63
KIT BOXSMART-12900 - 230V-2D	0,75	200-240 V AC II 50/60Hz	230 V AC III	12900	CJHCH-56-4T-1 IE3	DAMPER BOX SMART 56/63
KIT BOXSMART-17000 - 230V-2D	1,10	200-240 V AC II 50/60Hz	230 V AC III	1700	CJHCH-63-4T-1.5 IE3	DAMPER BOX SMART 56/63
KIT BOXSMART-7800 - 400V-2D	1,10	380-400 V AC III 50/60Hz	400 V AC III	7800	CJBD-3333-6T 1 1/2	DAMPER BOX SMART 56/63
KIT BOXSMART-12900 - 400V-2D	0,75	380-400 V AC III 50/60Hz	400 V AC III	12900	CJHCH-56-4T-1 IE3	DAMPER BOX SMART 56/63
KIT BOXSMART-17000 - 400V-2D	1,10	380-400 V AC III 50/60Hz	400 V AC III	1700	CJHCH-63-4T-1.5 IE3	DAMPER BOX SMART 56/63
KIT BOXSMART-21100 - 400V-2D	1,50	380-400 V AC III 50/60Hz	400 V AC III	21100	CJHCH-71-4T-2 IE3	DAMPER BOX SMART 71/80

* The output power is reduced by 20% when the equipment is operating in the lower electrical power range.
** The same models, may be supplied with the KIT BOXSMART II for standby fan (a second impulsion unit is added to the KIT BOXSMART).

Application example

Overpressure smoke control method

This system uses pressurisation by injecting air into spaces that are used as evacuation routes in the event of a fire, including stairwells, corridors, passageways, lifts, etc., especially in tall buildings with high occupancy.

The method is based on using air speed and over pressure to create a barrier, preventing smoke from entering evacuation routes.

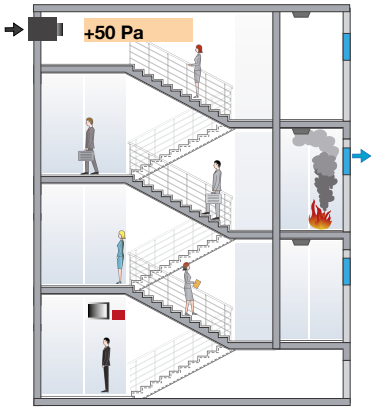

Accessories

CM-SMART

SI-CALENDAR

Dimensions mm

DAMPER BOXSMART

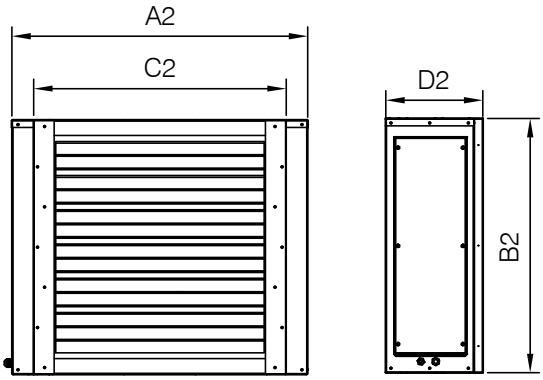

BOXSMART

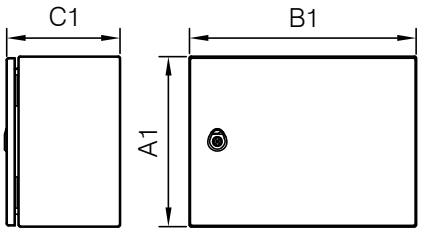

CJHCH

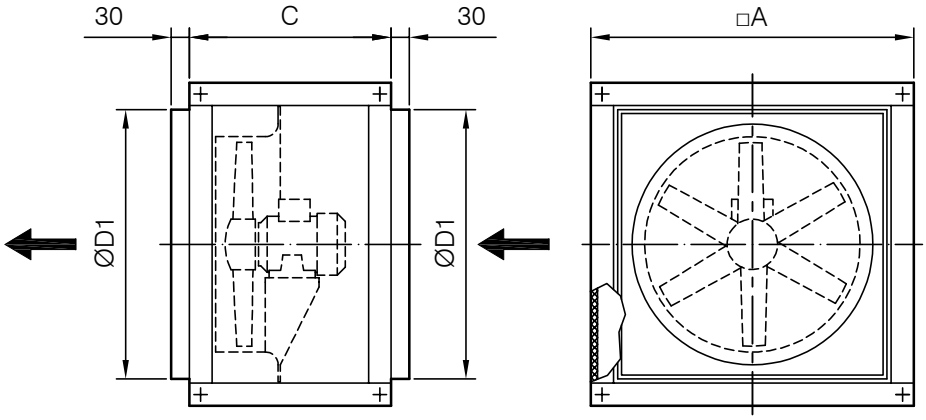

	A	C	ØD1	A1	B1	C1	A2	B2*	C2*	D2
KIT BOXSMART-7100 - 230V-1D	700	550	565	400	600	250	835	690	690	350
KIT BOXSMART-12900 - 230V-1D	825	550	690	400	600	250	835	690	690	350
KIT BOXSMART-17000 - 230V-1D	825	550	690	400	600	250	835	690	690	350
KIT BOXSMART-12900 - 400V-1D	825	550	690	400	600	250	835	690	690	350
KIT BOXSMART-17000 - 400V-1D	825	550	690	400	600	250	835	690	690	350
KIT BOXSMART-21100 - 400V-1D	1000	650	850	400	600	250	995	850	850	350
KIT BOXSMART-7100 - 230V-2D	700	550	565	400	600	250	835	690	690	350
KIT BOXSMART-12900 - 230V-2D	825	550	690	400	600	250	835	690	690	350
KIT BOXSMART-17000 - 230V-2D	825	550	690	400	600	250	835	690	690	350
KIT BOXSMART-12900 - 400V-2D	825	550	690	400	600	250	835	690	690	350
KIT BOXSMART-17000 - 400V-2D	825	550	690	400	600	250	835	690	690	350
KIT BOXSMART-21100 - 400V-2D	1000	650	850	400	600	250	995	850	850	350
KIT BOXSMART-II-7100 - 230V-1D	700	550	565	400	600	250	835	690	690	350
KIT BOXSMART-II-12900 - 230V-1D	825	550	690	400	600	250	835	690	690	350
KIT BOXSMART-II-17000 - 230V-1D	825	550	690	400	600	250	835	690	690	350
KIT BOXSMART-II-12900 - 400V-1D	825	550	690	400	600	250	835	690	690	350
KIT BOXSMART-II-17000 - 400V-1D	825	550	690	400	600	250	835	690	690	350
KIT BOXSMART-II-21100 - 400V-1D	1000	650	850	400	600	250	995	850	850	350
KIT BOXSMART-II-7100 - 230V-2D	700	550	565	400	600	250	835	690	690	350
KIT BOXSMART-II-12900 - 230V-2D	825	550	690	400	600	250	835	690	690	350
KIT BOXSMART-II-17000 - 230V-2D	825	550	690	400	600	250	835	690	690	350
KIT BOXSMART-II-12900 - 400V-2D	825	550	690	400	600	250	835	690	690	350
KIT BOXSMART-II-17000 - 400V-2D	825	550	690	400	600	250	835	690	690	350
KIT BOXSMART-II-21100 - 400V-2D	1000	650	850	400	600	250	995	850	850	350

* Duct measurements.

Dimensions mm

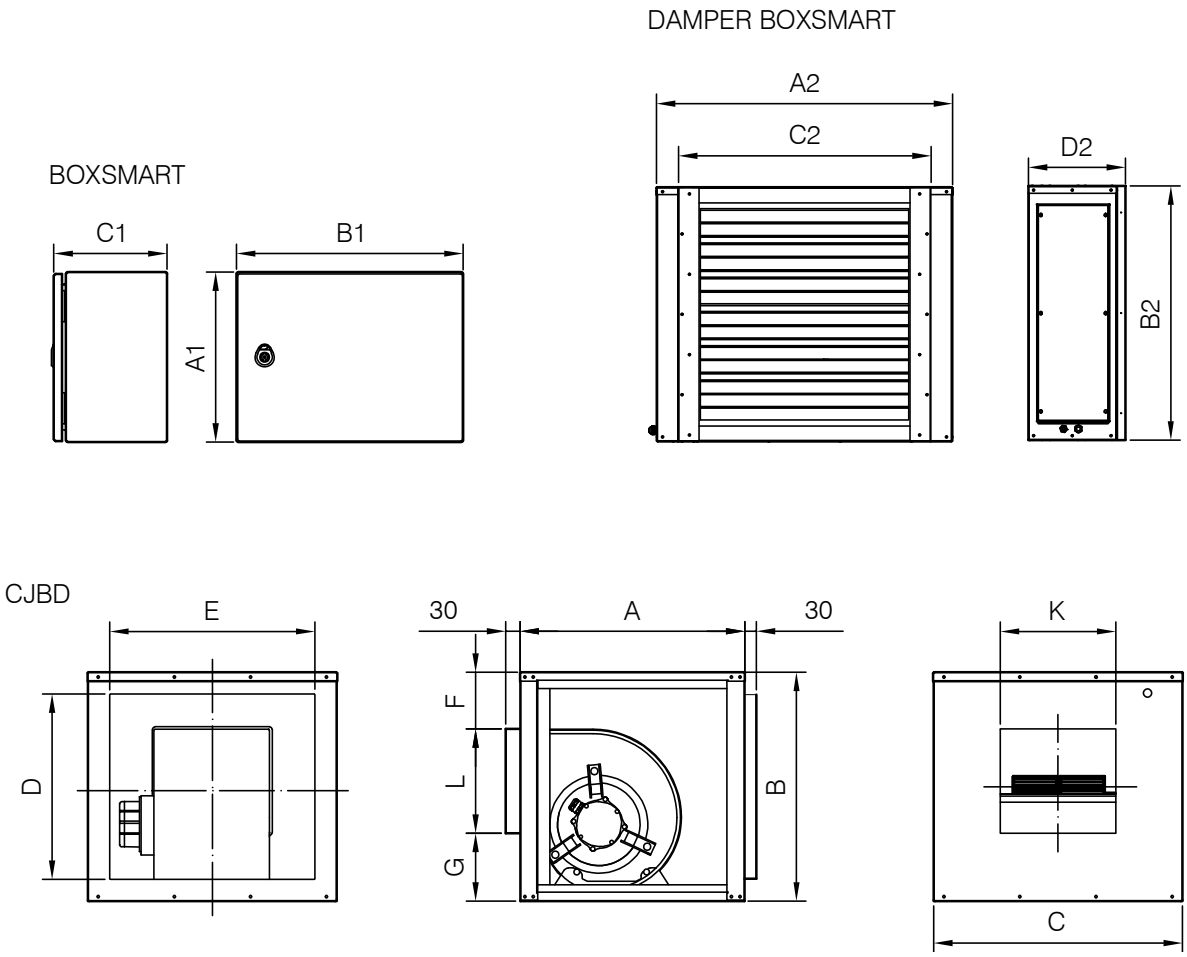

	A	B	C	D	E	F	G	K	L	A1	B1	C1	A2	B2*	C2*	D2
KIT BOXSMART-2880 - 230V-1D	550	575	600	479	504	104	177	330	294	400	600	250	835	690	690	350
KIT BOXSMART-7800 - 230V-1D	650	650	700	554	604	105	198	392	347	400	600	250	835	690	690	350
KIT BOXSMART-7800 - 400V-1D	650	650	700	554	604	105	198	392	347	400	600	250	835	690	690	350
KIT BOXSMART-2880 - 230V-2D	550	575	600	479	504	104	177	330	294	400	600	250	835	690	690	350
KIT BOXSMART-7800 - 230V-2D	650	650	700	554	604	105	198	392	347	400	600	250	835	690	690	350
KIT BOXSMART-7800 - 400V-2D	650	650	700	554	604	105	198	392	347	400	600	250	835	690	690	350
KIT BOXSMART-II -2880 - 230V-1D	550	575	600	479	504	104	177	330	294	400	600	250	835	690	690	350
KIT BOXSMART-II-7800 - 230V-1D	650	650	700	554	604	105	198	392	347	400	600	250	835	690	690	350
KIT BOXSMART-II-7800 - 400V-1D	650	650	700	554	604	105	198	392	347	400	600	250	835	690	690	350
KIT BOXSMART-II -2880 - 230V-2D	550	575	600	479	504	104	177	330	294	400	600	250	835	690	690	350
KIT BOXSMART-II-7800 - 230V-2D	650	650	700	554	604	105	198	392	347	400	600	250	835	690	690	350
KIT BOXSMART-II-7800 - 400V-2D	650	650	700	554	604	105	198	392	347	400	600	250	835	690	690	350

* Duct measurements.

BOXSMART

Control panel for a fan

BOXSMART II

Control panel with standby fan

The BOXSMART control panel includes:

- Variable frequency drive programmed at 50 Pa and highly accurate differential pressure probe.
- External connection for the control panel to be used exclusively by firefighters.
- Magnetic thermal switch.
- Status indicator lamp: Ready, Alarm, Fire and Run.
- Built-in control panel with TEST selector for maintenance and selector to be used exclusively by firefighters 0-AUTO-MANUAL.
- Operating procedures in safe mode in the case of failure of the differential pressure probe and automatic reset of the system in case of failure.
- Connection of status signals using free power contacts (FAULT, START and FIRE ACTIVATION) and connection to BMS systems via RTU Modbus for monitoring the equipment.
- Memory of the last activation state for greater security, resettable from the RESET selector on the control panel or by external signal.
- External connection for daily ventilation use through SI-CALENDAR accessory.
- Metal casing with lock with key and with IP66 protection.
- Capable of managing asynchronous motors, IPM or RM.
- Ready to operate and perform its function of pressure control.
- Only the power supply, the impulsion fan and the fire signal need to be connected.
- Different input voltage ranges and power on demand.
- Integrated control of motorised dampers with smoke detector (Compatible with DAMPER BOX SMART).

Options:

- BOXSMART: control box for a fan.
- BOXSMART II: control panel with backup fan.

Order code

BOXSMART — 1.1 — 230 — M — T — 1D

- **BOXSMART**: BOXSMART: Control panel for a fan; BOXSMART II: Control panel with standby fan
- **1.1**: Power (kW)
- **230**: Input voltage
- **M**: M: Single-phase input; T: Three-phase input
- **T**: M: Single-phase output; T: Three-phase output
- **1D**: To control: 1D: 1 DAMPER BOX SMART; 2D: 2 DAMPER BOX SMART

Technical characteristics and dimensions

Model	Power (kW)	Power supply (V) (Hz)	Outlet (V)	Max. Output current (A)	Size	Measurements (length x width x depth)	Approx. weight (Kg)
BOXSMART-0.37-230V 50/60Hz M-T-1D	0,37	200-240 V AC II 50/60Hz	230 V AC III	2,3	1	400x600x250	18
BOXSMART-0.75-230V 50/60Hz M-T-1D	0,75	200-240 V AC II 50/60Hz	230 V AC III	4,3	1	400x600x250	18
BOXSMART-1.5-230V 50/60Hz M-T-1D	1,50	200-240 V AC II 50/60Hz	230 V AC III	7,0	1	400x600x250	18
BOXSMART-0.75-400V 50/60Hz T-T-1D	0,75	380-400 V AC III 50/60Hz	400 V AC III	2,2	1	400x600x250	18
BOXSMART-1.5-400V 50/60Hz T-T-1D	1,50	380-400 V AC III 50/60Hz	400 V AC III	4,1	1	400x600x250	18
BOXSMART-2.2-400V 50/60Hz T-T-1D	2,20	380-400 V AC III 50/60Hz	400 V AC III	5,8	2	500x700x250	26
BOXSMART-4-400V 50/60Hz T-T-1D	4,00	380-400 V AC III 50/60Hz	400 V AC III	9,5	2	500x700x250	26
BOXSMART-5.5-400V 50/60Hz T-T-1D	5,50	380-400 V AC III 50/60Hz	400 V AC III	14,0	3	600x800x250	33

Technical characteristics and dimensions

Model	Power (kW)	Power supply (V) (Hz)	Outlet (V)	Max. Output current (A)	Size	Measurements (length x width x depth)	Approx. weight (Kg)
BOXSMART-7.5-400V 50/60Hz T-T-1D	7,50	380-400 V AC III 50/60Hz	400 V AC III	18,0	3	600x800x250	33
BOXSMART-11-400V 50/60Hz T-T-1D	11,00	380-400 V AC III 50/60Hz	400 V AC III	24,0	3	600x800x250	33
BOXSMART-0.37-230V 50/60Hz M-T-2D	0,37	200-240 V AC II 50/60Hz	230 V AC III	2,3	1	400x600x250	18
BOXSMART-0.75-230V 50/60Hz M-T-2D	0,75	200-240 V AC II 50/60Hz	230 V AC III	4,3	1	400x600x250	18
BOXSMART-1.5-230V 50/60Hz M-T-2D	1,50	200-240 V AC II 50/60Hz	230 V AC III	7,0	1	400x600x250	18
BOXSMART-0.75-400V 50/60Hz T-T-2D	0,75	380-400 V AC III 50/60Hz	400 V AC III	2,2	1	400x600x250	18
BOXSMART-1.5-400V 50/60Hz T-T-2D	1,50	380-400 V AC III 50/60Hz	400 V AC III	4,1	1	400x600x250	18
BOXSMART-2.2-400V 50/60Hz T-T-2D	2,20	380-400 V AC III 50/60Hz	400 V AC III	5,8	2	500x700x250	26
BOXSMART-4-400V 50/60Hz T-T-2D	4,00	380-400 V AC III 50/60Hz	400 V AC III	9,5	2	500x700x250	26
BOXSMART-5.5-400V 50/60Hz T-T-2D	5,50	380-400 V AC III 50/60Hz	400 V AC III	14,0	3	600x800x250	33
BOXSMART-7.5-400V 50/60Hz T-T-2D	7,50	380-400 V AC III 50/60Hz	400 V AC III	18,0	3	600x800x250	33
BOXSMART-11-400V 50/60Hz T-T-2D	11,00	380-400 V AC III 50/60Hz	400 V AC III	24,0	3	600x800x250	33

Connections

*All connections are made at the top section of the panel.

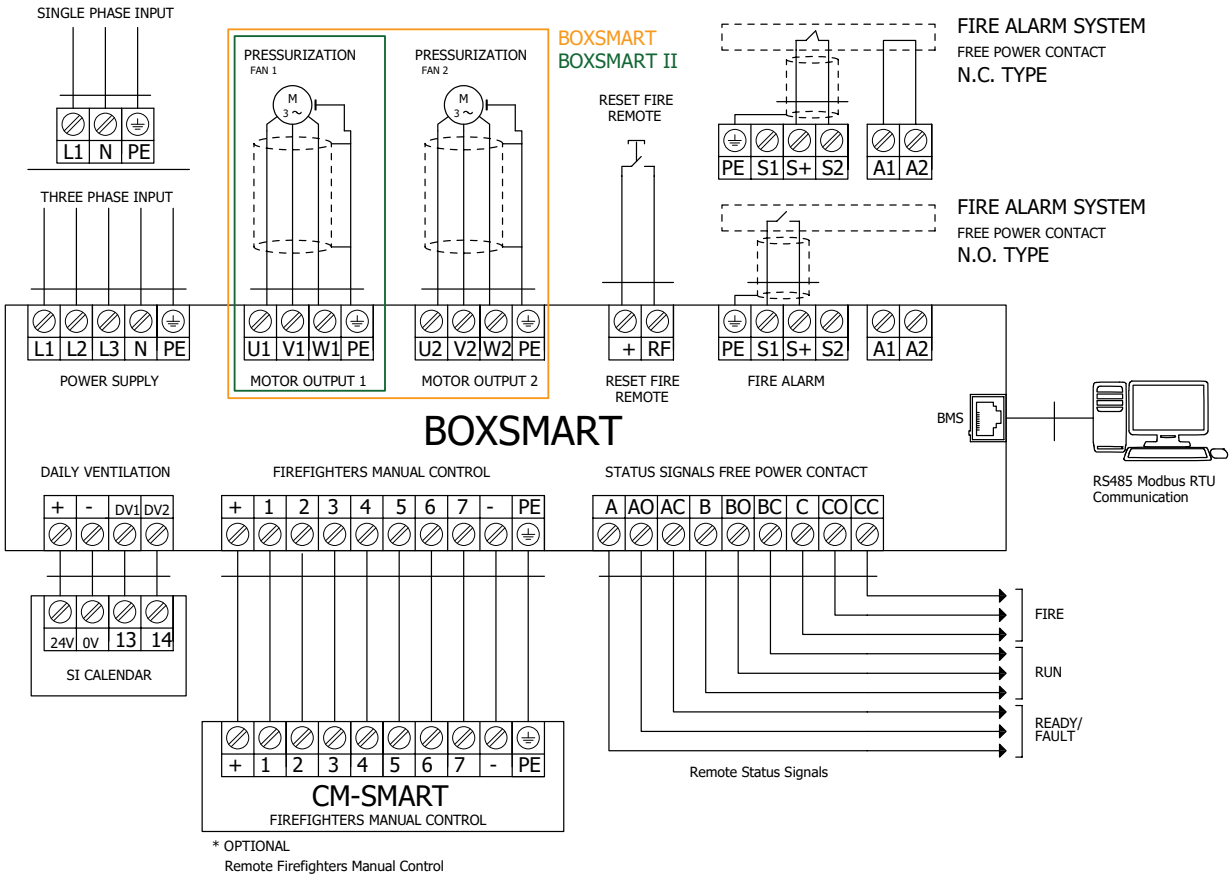

Connections

*All connections are made at the top section of the panel.

BOXSMART 1D / BOXSMART II 1D
BOXSMART 2D / BOXSMART II 2D

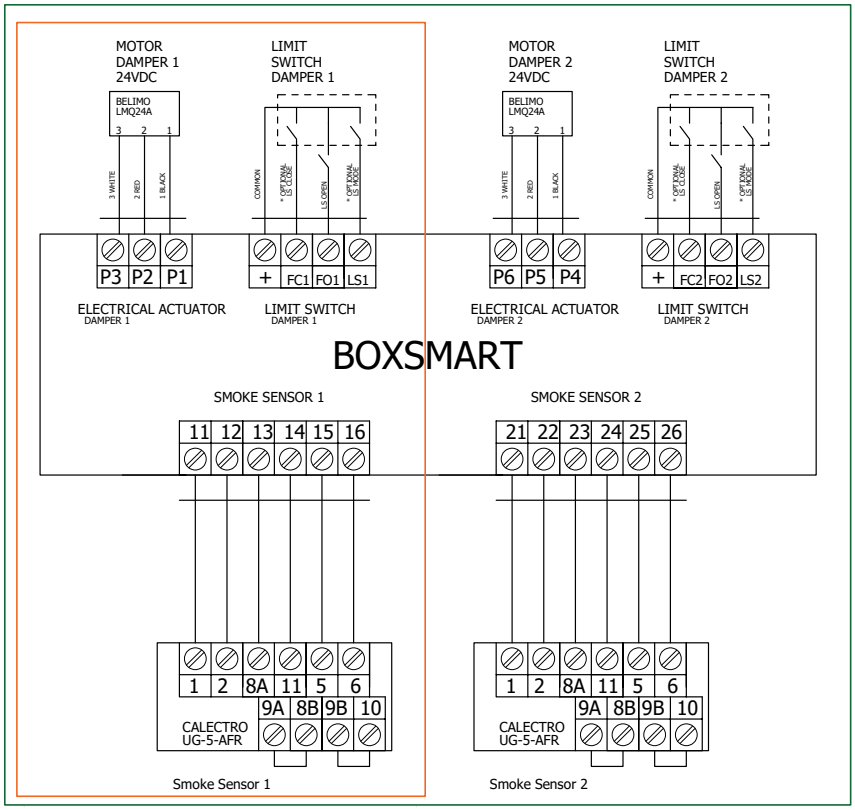

Accessories

CM-SMART

SI-CALENDAR

DAMPER BOX SMART

KIT BOXSMART EC

Pressurisation system for stairs or evacuation routes. Maintains a differential pressure of 50 Pa in a single stage, designed according to the European standard EN 12101-6

The correct operation of the pressurisation systems depends not only on their sound design, but also on the correct regulation performed by the system. For this reason, it is extremely important to have calibrated, high precision regulation elements that will permit both situations present in the event of a fire to be maintained simultaneously, quickly and stably.

Staircase overpressure kit, consisting of a control panel (BOXSMART EC) and a high-efficiency drive unit with EC Technology motors (CJK/EC).

CM-SMART: External control panel for firefighters

- The CM-SMART indicates the system status and provides firefighters with the option of manually turning the system on or off via its selector switch. We recommend that this panel be installed at the main entry point to the protected area.
- This unit is not included in the KIT BOXSMART EC.
- The BOXSMART EC model is compatible with CM-SMART.

- Easy to install.
- A compact, autonomous solution.
- Easy start-up.
- Safe, functional installation.

Order code

KIT BOXSMART EC — 3600 — 230

KIT BOXSMART EC: Pressurisation unit for operating EC motors with built-in electronics

Maximum flow rate (m^3/h)

230: Single-phase 200 to 240 V 50/60 Hz input
400: Three-phase 380 to 480 V 50/60 Hz input

Technical characteristics

Model	Power (kW)	Power supply (V) (Hz)	Outlet (V)	Maximum flow rate (m^3/h)	Impulsion unit
KIT BOXSMART EC-1900 - 230	0.2	200 a 240 V 50/60 Hz	230 V 50/60 Hz	1920	CJK/EC-310
KIT BOXSMART EC-3600 - 230	0.5	200 a 240 V 50/60 Hz	230 V 50/60 Hz	3640	CJK/EC-400
KIT BOXSMART EC-6500 - 400	1.1	380 a 480 V 50/60 Hz	400 V 50/60 Hz	6580	CJK/EC-500

* The output power is reduced by 20% when the equipment is operating in the lower electrical power range. The same models, except the FLAP models, may be supplied with the KIT BOXSMART II for standby fan (a second impulsion unit is added to the KIT BOXSMART).

Dimensions mm

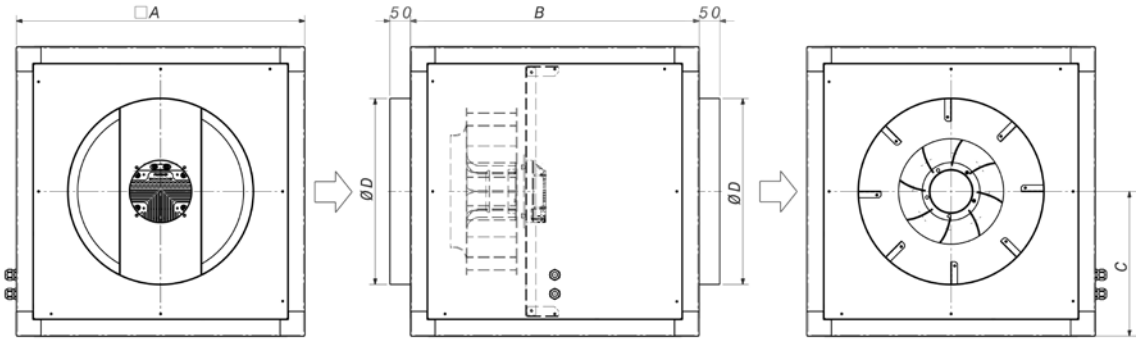

	A	B	C	ØD
CJK/EC-310	500	500	250	355
CJK/EC-400	700	700	350	450
CJK/EC-500	900	900	450	500

Application example

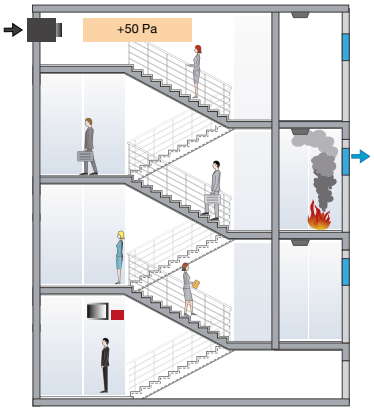

Overpressure smoke control method

This system uses pressurisation by injecting air into spaces that are used as evacuation routes in the event of a fire, including stairwells, corridors, passageways, lifts, etc., especially in tall buildings with high occupancy.

The method is based on using air speed and over pressure to create a barrier, preventing smoke from entering evacuation routes.

BOXSMART EC

Control panel for an EC motor fan

The BOXSMART EC control panel includes:

- Variable frequency drive programmed at 50 Pa and highly accurate differential pressure probe.
- External connection for the control panel to be used exclusively by firefighters.
- Magnetic thermal switch.
- Status indicator lamp: Ready, Alarm, Fire and Run.
- Built-in control panel with TEST selector for maintenance and selector to be used exclusively by firefighters 0-AUTO-MANUAL.
- Operating procedures in safe mode in the case of failure of the differential pressure probe and automatic reset of the system in case of failure.
- Connection of status signals using free power contacts (FAULT, START and FIRE ACTIVATION) and connection to BMS systems via RTU Modbus for monitoring the equipment.
- Memory of the last activation state for greater security, resettable from the RESET selector on the control panel or by external signal.
- External connection for daily ventilation use through SI-CALENDAR accessory.
- Metal casing with lock with key and with IP66 protection.
- Capable of managing asynchronous motors, IPM or RM.
- Ready to operate and perform its function of pressure control.
- Only the power supply, the impulsion fan and the fire signal need to be connected.
- Different input voltage ranges and power on demand.

Options:

- BOXSMART EC: control panel for an EC motor fan.
- BOXSMART: control box for a fan.
- BOXSMART II: control panel with backup fan.
- BOXSMART FLAP: control panel with damper fan.

Order code

BOXSMART EC — 0.5 — 230 — M

- BOXSMART EC: Control panel for an EC motor fan
- Power (kW)
- Input voltage
- M: Single-phase input
  T: Three-phase input

Technical characteristics

Model	Power (kW)	Power supply (V) (Hz)	Outlet (V)	Max. Output current (A)	Size	Measurements (length x width x depth)	Approx. weight (Kg)
BOXSMART EC-0.5-230V 50/60HZ-M-M	0.5	200 a 240 V 50/60 Hz	230 V 50/60 Hz	1.5	1	300x400x200	10
BOXSMART EC-1.1-400V 50/60HZ-T-T	1.1	380 a 480 V 50/60 Hz	400 V 50/60 Hz	2.0	1	300x400x200	10

Connections

*All connections are made at the top section of the panel.

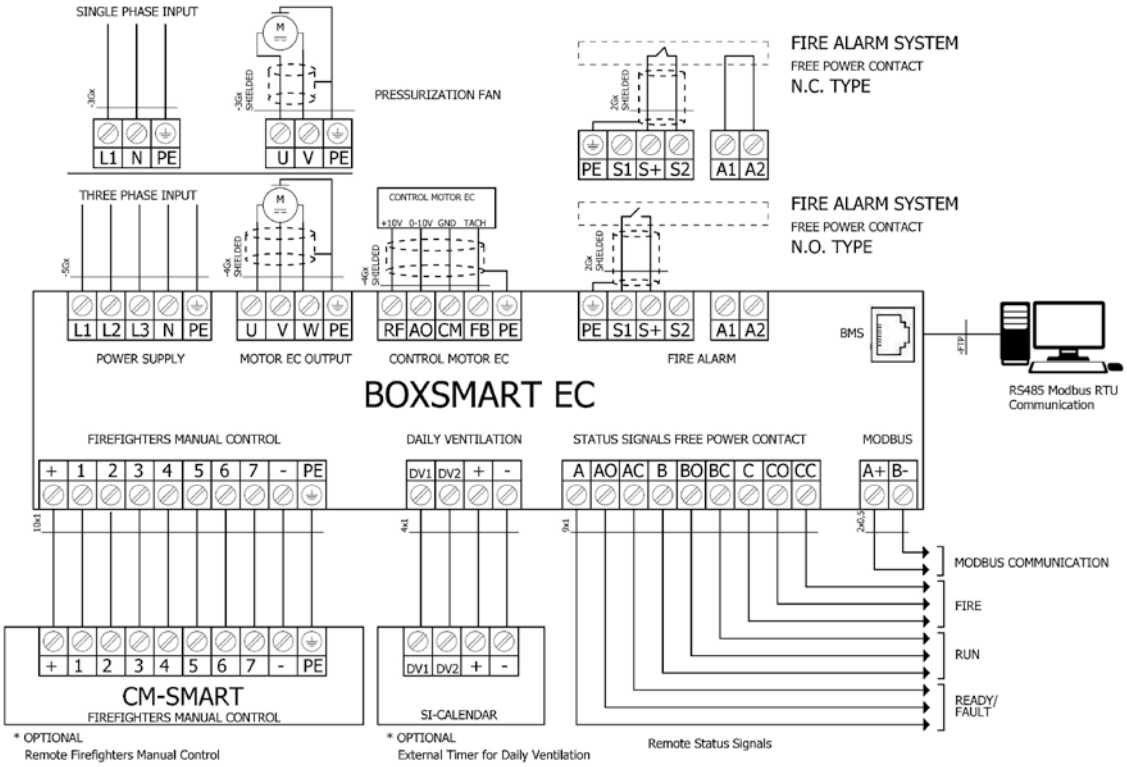

Accessories

CM-SMART

SI-CALENDAR

KIT BOXSMART FLAP

Pressurisation system for stairs or evacuation routes. Maintains a differential pressure of 50 Pa in a single stage, designed according to the European standard EN 12101-6

The correct operation of the pressurisation systems depends not only on their sound design, but also on the correct regulation performed by the system. For this reason, it is extremely important to have calibrated, high precision regulation elements that will permit both situations present in the event of a fire to be maintained simultaneously, quickly and stably.

Overpressure kit with hatch fan, consisting of a control panel (BOXSMART FLAP), which incorporates a control system for hatch fans (WALL or HATCH).

Optional CM-SMART accessory:
- External control panel for firefighters.
- Indicates the system status and provides firefighters with the option of manually turning the system on or off via its selector switch. We recommend that this panel be installed at the main entry point to the protected area.
- This unit is not included in the KIT BOXSMART FLAP.
- The BOXSMART FLAP models are compatible with CM-SMART FLAP.

On request:
- Customized panels for all powers according to project needs.

- Easy to install.
- A compact, autonomous solution.
- Easy start-up.
- Safe, functional installation.

Order code

KIT BOXSMART FLAP — 21100 — 400

- KIT BOXSMART FLAP: Pressurisation unit with hatch fan
- 21100: Maximum flow rate (m³/h)
- 400: Three-phase 380 to 480 V 50/60 Hz input

Technical characteristics

Model	Power (kW)	Power supply (V) (Hz)	Outlet (V)	Maximum flow rate (m³/h)	Impulsion unit
KIT BOXSMART FLAP-21100 - 400	1.5	380 a 480 V 50/60 Hz	400 V 50/60 Hz	21100	WALL/DUCT-71-4T IE3
KIT BOXSMART FLAP-25400 - 400	3.0	380 a 480 V 50/60 Hz	400 V 50/60 Hz	25400	HCT/HATCH-63-4T-4 IE3
KIT BOXSMART FLAP-41850 - 400	4.0	380 a 480 V 50/60 Hz	400 V 50/60 Hz	41850	WALL/DUCT-90-4T-5.5 IE3
KIT BOXSMART FLAP-52500 - 400	5.5	380 a 480 V 50/60 Hz	400 V 50/60 Hz	52500	HCT/HATCH-100-4T-7.5 IE3

* The output power is reduced by 20% when the equipment is operating in the lower electrical power range. The same models, except the FLAP models, may be supplied with the KIT BOXSMART II for standby fan (a second impulsion unit is added to the KIT BOXSMART).

Dimensions mm

HCT/HATCH

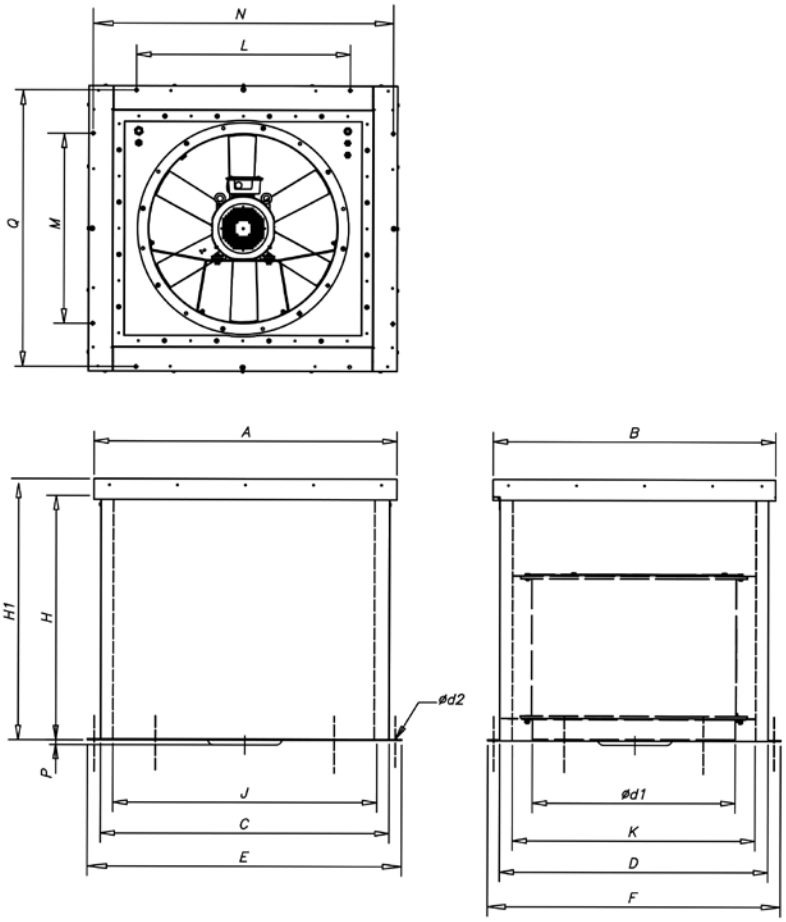

	A	B	C	D	ød1	E	F	H	H1	J	K	L	M	N	P	Q	Ød2
HCT/HATCH-63	1300	1200	1220	1120	630	1300	1200	900	1000	1100	1000	900	800	1265	-	1165	13
HCT/HATCH-100	1500	1400	1420	1320	1000	1500	1400	900	1000	1300	1200	1100	1000	1465	-	1365	13

Dimensions mm

WALL/DUCT

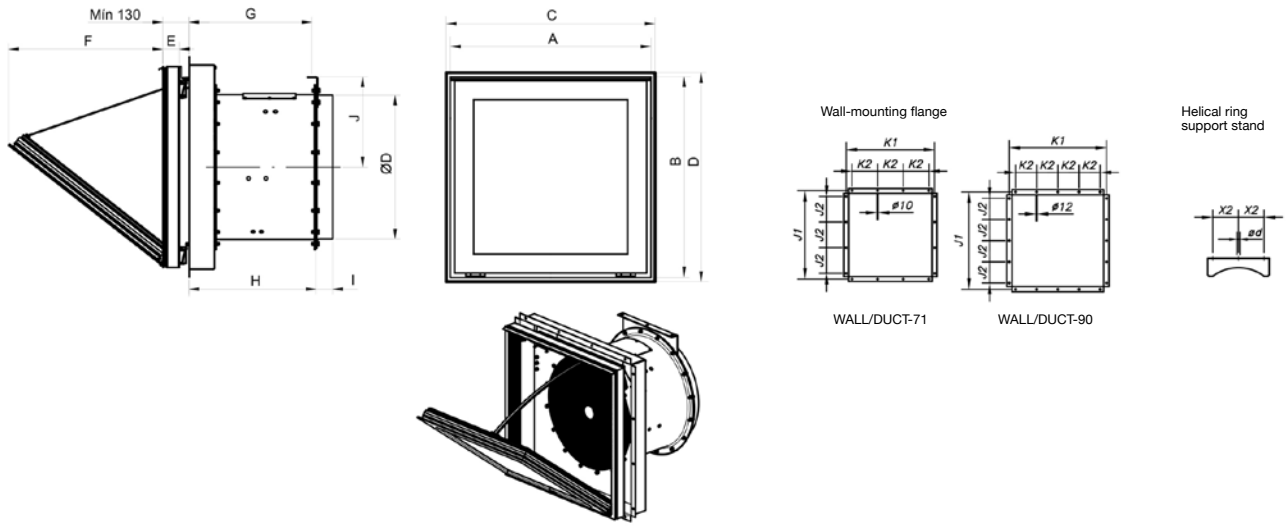

	A	B	C	ød	D	ØD*	E	F	G	H	I	J	J1	J2	K1	K2	X2
WALL/DUCT-71	990	990	1000	13	1000	710	82	760	605	630	80	445	1050	300	1050	300	225
WALL/DUCT-90	1190	1190	1200	18	1200	900	82	790	605	630	100	550	1250	250	1250	250	280

* Recommended nominal tube diameter
(CxD) Nominal panel opening dimension.

Application example

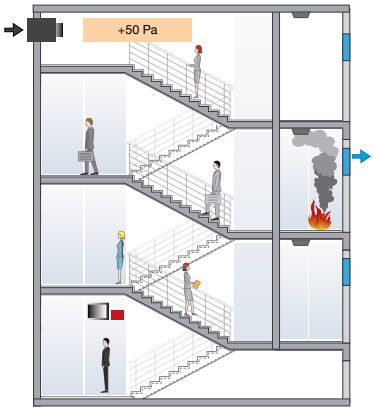

Overpressure smoke control method

This system uses pressurisation by injecting air into spaces that are used as evacuation routes in the event of a fire, including stairwells, corridors, passageways, lifts, etc., especially in tall buildings with high occupancy.

The method is based on using air speed and over pressure to create a barrier, preventing smoke from entering evacuation routes.

BOXSMART FLAP

Control panel with damper fan

The BOXSMART FLAP control panel includes:

- Variable frequency drive programmed at 50 Pa and highly accurate differential pressure probe.
- External connection for the control panel to be used exclusively by firefighters.
- Magnetic thermal switch.
- Status indicator lamp: Ready, Alarm, Fire and Run.
- Built-in control panel with TEST selector for maintenance and selector to be used exclusively by firefighters 0-AUTO-MANUAL.
- Operating procedures in safe mode in the case of failure of the differential pressure probe and automatic reset of the system in case of failure.
- Connection of status signals using free power contacts (FAULT, START and FIRE ACTIVATION) and connection to BMS systems via RTU Modbus for monitoring the equipment.
- Memory of the last activation state for greater security, resettable from the RESET selector on the control panel or by external signal.
- External connection for daily ventilation use through SI-CALENDAR accessory.
- Metal casing with lock with key and with IP66 protection.
- Capable of managing asynchronous motors, IPM or RM.
- Ready to operate and perform its function of pressure control.
- Only the power supply, the impulsion fan and the fire signal need to be connected.
- Different input voltage ranges and power on demand.

Options:

- BOXSMART EC: control panel for an EC motor fan.
- BOXSMART: control box for a fan.
- BOXSMART II: control panel with backup fan.
- BOXSMART FLAP: control panel with damper fan.

Order code

BOXSMART FLAP — 1.5 — 400 — T

- BOXSMART FLAP: Control panel with damper fan
- 1.5: Power (kW)
- 400: Input voltage
- T: Three-phase input

Technical characteristics

Model	Power (kW)	Power supply (V) (Hz)	Outlet (V)	Max. Output current (A)	Size	Measurements (length x width x depth)	Approx. weight (Kg)
BOXSMART FLAP-1.5-400V 50/60Hz-T-T	1.50	380 a 480 V 50/60 Hz	400 V 50/60 Hz	4.1	2	400x500x250	18
BOXSMART FLAP-4-400V 50/60Hz-T-T	4.00	380 a 480 V 50/60 Hz	400 V 50/60 Hz	9.5	3	400x600x250	20
BOXSMART FLAP-5.5-400V 50/60Hz-T-T	5.50	380 a 480 V 50/60 Hz	400 V 50/60 Hz	14.0	4	500x700x250	28

Connections

*All connections are made at the top section of the panel.

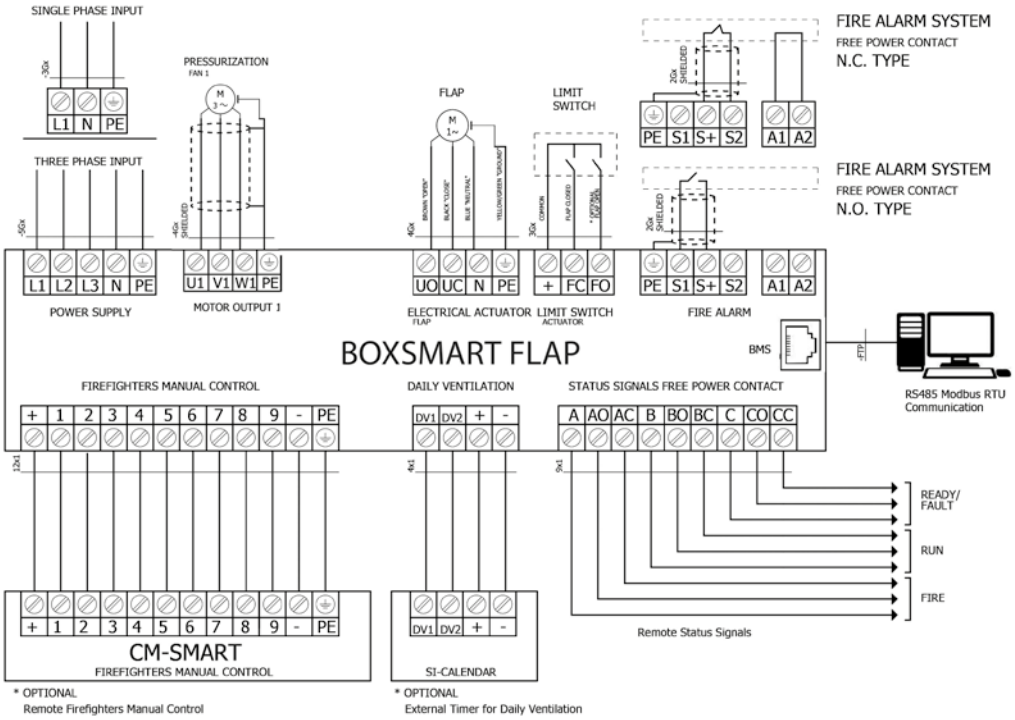

Accessories

CM-SMART

SI-CALENDAR

KIT SOBREPRESIÓN

Pressurisation system for stairs or evacuation routes. Maintains a differential pressure of 50 Pa in a single stage, designed according to the European standard EN 12101-6

STAIRCASES OVERPRESSURE KIT
For three-phase equipment

STAIRCASES OVERPRESSURE KIT
For single-phase equipment

OVERPRESSURE KIT WITH STANDBY FAN

STAIRCASES OVERPRESSURE KIT
- Staircase overpressure kit, consisting of a control panel (BOXPRES KIT) and drive units (CJHCH or CJBD), for pressurizing stairways and evacuation routes. Also available for single phase equipment.

OVERPRESSURE KIT WITH STANDBY FAN
- Overpressure kit with standby fan comprised of a control panel (BOXPRES KIT II) with a built-in automatic switching system that maintains the overpressure in the event of a failure in the main fan and air impulsion units with a back-up fan.
- The BOXPRES control panel not only complies with the strictest requirements, it simplifies the work for the installer.

It includes:
- Variable frequency drive programmed at 50 Pa.
- Differential pressure probe.
- Magnetic thermal switch.
- Line and fault LEDs.
- Check button.

BOXPRES is a control box with all its connections made and tested. Ready to operate and perform its function on the control of the installation pressure. Possibility of checking the installation to avoid failures. Only the power line, the supply fan and the fire signal should be connected.

The single-phase panels include:
- Voltage regulator programmed at 50 Pa.
- Differential pressure probe external to the equipment.

- Easy to install.
- A compact, autonomous solution.
- Preventive maintenance.
- Easy start-up.
- Safe, functional installation.

Order code

KIT SOBREPRESIÓN — 7100

KIT SOBREPRESIÓN: Staircases overpressure unit
KIT SOBREPRESIÓN II: Overpressure unit with standby fan

Maximum flow rate (m^3/h)

Technical characteristics

Model	Power supply	Outlet	Impulsion unit	Flow rate (m^3/h)	Noise level dB (A)
KIT SOBREPRESION-1400-LED	230 V AC II	230 V AC II	NEOLINEO-250	1400	66
KIT SOBREPRESION-2200-LED	230 V AC II	230 V AC II	NEOLINEO-315	2200	69
KIT SOBREPRESION-2700-LED	230 V AC II	230 V AC II	CJBD-2525-6M 1/3	2700	61
KIT SOBREPRESION-7100-LED	230 V AC II	230 V AC III	CJHCH-45-4T-0.5	7100	55
KIT SOBREPRESION-7800-LED	230 V AC II	230 V AC III	CJBD-3333-6T-1 1/2	7800	55
KIT SOBREPRESION-12900-LED	230 V AC II	230 V AC III	CJHCH-56-4T-1	12900	60
KIT SOBREPRESION-17000-LED	230 V AC II	230 V AC III	CJHCH-63-4T-1.5	17000	61
KIT SOBREPRESION-7100-BOX	400 V AC III	400 V AC III	CJHCH-45-4T-0.5	7100	55
KIT SOBREPRESION-7800-BOX	400 V AC III	400 V AC III	CJBD-3333-6T-1 1/2	7800	55
KIT SOBREPRESION-12900-BOX	400 V AC III	400 V AC III	CJHCH-56-4T-1	12900	60
KIT SOBREPRESION-17000-BOX	400 V AC III	400 V AC III	CJHCH-63-4T-1.5	17000	61
KIT SOBREPRESION II-7800-BOX	400 V AC III	400 V AC III	CJBD/TWO-3333-6T-1.5	7800	75
KIT SOBREPRESION II-11400-BOX	400V AC III	400 V AC III	CJBD/TWO-15/15-6T-3	11400	75
KIT SOBREPRESION II-12900-BOX	400 V AC III	400 V AC III	CJHCH/DUPLEX-56-4T-1-H	12900	60
KIT SOBREPRESION II-17000-BOX	400 V AC III	400 V AC III	CJHCH/DUPLEX-63-4T-1.5-H	17000	61
SI-PRESIÓN TPDA					
SI-PRESIÓN TPDA c/DISPLAY					
BOXPRES KIT-3A 230Vac	230 V AC II	230 V AC II			
BOXPRES KIT-10A 230Vac	230 V AC II	230 V AC II			
BOXPRES KIT-0.37W 230Vac	230 V AC II	230 V AC II			
BOXPRES KIT-0.75KW 230Vac	230 V AC II	230 V AC III			
BOXPRES KIT-1.5KW 230Vac	230 V AC II	230 V AC III			
BOXPRES KIT-2.2KW 230Vac	230 V AC II	230 V AC II			
BOXPRES KIT-0.75KW 400Vac	400 V AC III	400 V AC III			
BOXPRES KIT-1.5KW 400Vac	400 V AC III	400 V AC III			
BOXPRES KIT-2.2KW 400Vac	400 V AC III	400 V AC III			
BOXPRES KIT II - 1.5KW 400Vac	400 V AC III	400 V AC III			
BOXPRES KIT II - 2.2KW 400Vac	400 V AC III	400 V AC III			

Dimensions mm

CJBD

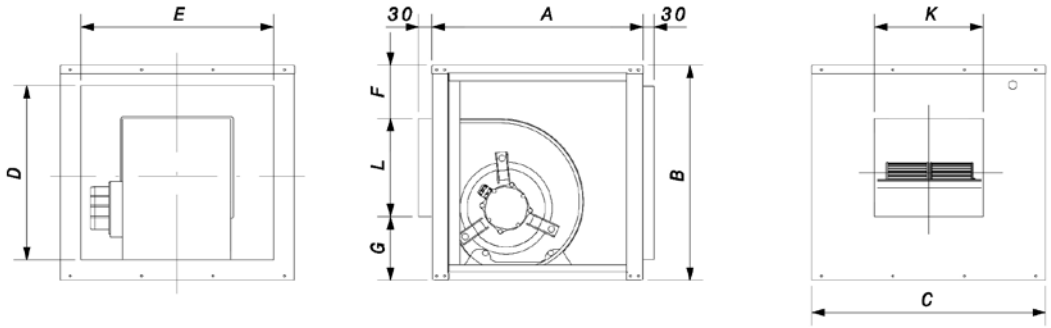

	Equivalence inches	A	B	C	D	E	F	G	K	L
CJBD-2525	9/9	500	522	550	426	454	107	147	303	268
CJBD-3333	12/12	650	650	700	554	604	105	198	392	347

Dimensions mm

CJHCH

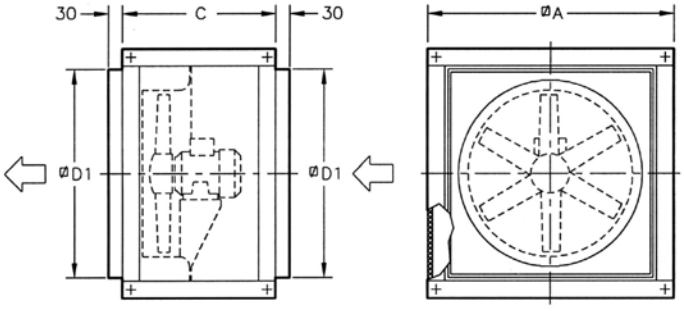

	A	C	D1
CJHCH-45	700	550	565
CJHCH-56/63	825	550	690

CJBD/TWO

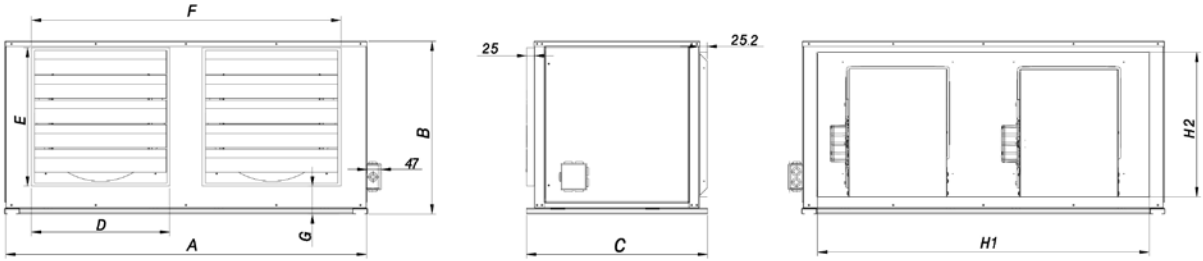

	A	B	C	D	E	F	G	H1	H2
CJBD/TWO-3333	1390	648.5	702.4	460	460	1149.3	156	1294.6	553.6
CJBD/TWO-15/15	1600	754	851.4	545	545	1342.6	186.5	1502.6	658.6

CJHCH/DUPLEX

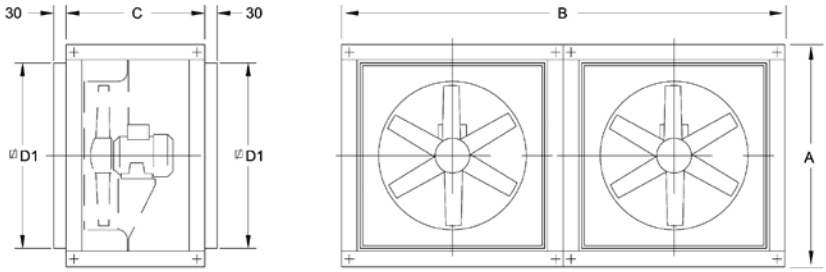

	A	B	C	D1
CJHCH/DUPLEX-56/63	825	1650	550	690

NEOLINEO

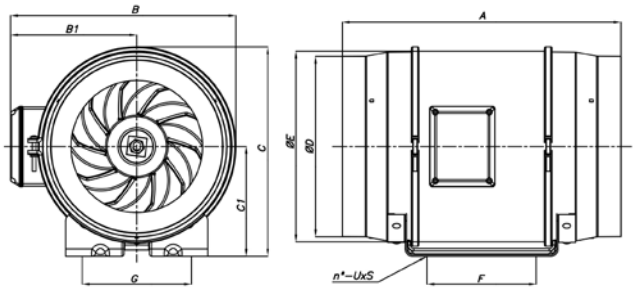

	A	B	B1	C	C1	ØD	ØE	F	G	nº	UxS
NEOLINEO-250/V	383	310	174	286	150	247	261	150	150	4	8x11
NEOLINEO-315/V	446	386	216	357	187	312	325	181	178	4	8x11

Technical characteristics and dimensions

BOXPRESS KIT SOBREPRESIÓN

Model	Power (kW)	Power supply (V) (Hz)	Outlet (V)	Max. Output current (A)	Size	Measurements (length x width x depth)
BOXPRES KIT-3A 230Vac	-	230 V AC II	230 V AC II	3.0	-	255 x 170 x 140 mm
BOXPRES KIT-10A 230Vac	-	230 V AC II	230 V AC II	10.0	-	255 x 170 x 140 mm
BOXPRES KIT-0.37W 230Vac	0.37	230 V II / 50 Hz	230 V III / 50 Hz	2.3	1	270 x 270 x 170 mm
BOXPRES KIT-0,75kW 230Vac	0.75	230 V II / 50 Hz	230 V III / 50 Hz	4.3	1	270 x 270 x 170 mm
BOXPRES KIT-1.5kW 230Vac	1.50	230 V II / 50 Hz	230 V III / 50 Hz	7.0	1	270 x 270 x 170 mm
BOXPRES KIT-2.2KW 230Vac	2.20	230 V II / 50 Hz	230 V III / 50 Hz	10.5	2	360 x 360 x 205 mm
BOXPRES KIT-0.75KW 400Vac	0.75	400 V III / 50 Hz	400 V III / 50 Hz	2.2	1	270 x 270 x 170 mm
BOXPRES KIT-1.5KW 400Vac	1.50	400 V III / 50 Hz	400 V III / 50 Hz	4.1	1	270 x 270 x 170 mm
BOXPRES KIT-2.2KW 400Vac	2.20	400 V III / 50 Hz	400 V III / 50 Hz	5.8	2	360 x 360 x 205 mm

Equipment cable entry gland

BOXPRES KIT-3A / KIT-10A

BOXPRES KIT Size 1 and 2

BOXPRESS KIT SOBREPRESIÓN II

For equipment with a reserve fan

Model	Power (kW)	Power supply (V) (Hz)	Outlet (V)	Max. Output current (A)	Size	Measurements (length x width x depth)
BOXPRES KIT II-1.5KW 400Vac	1.5	400 V III / 50 Hz	400 V III / 50 Hz	4.1	1	270 x 270 x 170 mm
BOXPRES KIT II-2.2KW 400Vac	2.2	400 V III / 50 Hz	400 V III / 50 Hz	5.4	2	360 x 360 x 205 mm

Both motors will never operate simultaneously.

Equipment cable entry gland

BOXPRES KIT Size 1 and 2

Application example

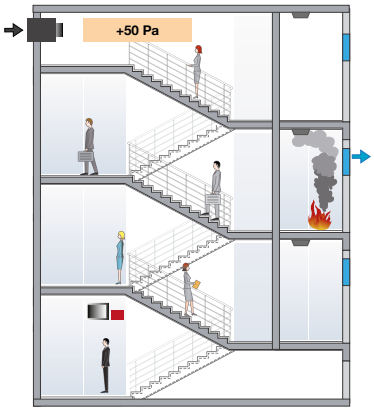

Overpressure smoke control method

This system uses pressurisation by injecting air into spaces that are used as evacuation routes in the event of a fire, including stairwells, corridors, passageways, lifts, etc., especially in tall buildings with high occupancy.

The method is based on using air speed and over pressure to create a barrier, preventing smoke from entering evacuation routes.

KIT BOXPRES PLUS

Pressurisation system for stairs or evacuation routes. Maintains a differential pressure of 50 Pa in a single stage, designed according to the European standard EN 12101-6

The correct operation of the pressurisation systems depends not only on their sound design, but also on the correct regulation performed by the system. For this reason, it is extremely important to have calibrated, high precision regulation elements that will permit both situations present in the event of a fire to be maintained simultaneously, quickly and stably.

KIT BOXPRES PLUS
- Staircase overpressure kit comprised of a control panel (BOXPRES PLUS) and an impulsion unit (CJHCH or CJBD), for pressurising staircases and evacuation routes.

KIT BOXPRES PLUS II
- Overpressure kit with standby fan comprised of a control panel (BOXPRES PLUS II) with a built-in automatic switching system that maintains the overpressure in the event of the main fan failure.

CM-SMART External control panel for firefighters
- The CM-SMART indicates the system status and provides firefighters with the option of manually turning the system on or off via its selector switch. We recommend that this panel be installed at the main entry point to the protected area.
- This unit is not included in the KIT BOXPRES PLUS.
- The BOXPRES PLUS and BOXPRES PLUS II models are compatible with CM-SMART.

- Easy to install.
- A compact, autonomous solution.
- Easy start-up.
- Safe, functional installation.

Order code

KIT BOXPRES PLUS — 7100 — 230

- KIT BOXPRES PLUS: Overpressure unit
  KIT BOXPRES PLUS II: Overpressure unit with standby fan
- Maximum flow rate (m^3/h)
- 230: Single-phase 200 to 240 V 50/60 Hz input
  400: Three-phase 380 to 480 V 50/60 Hz input

Technical characteristics

Model	Power (kW)	Power supply (V) (Hz)	Outlet (V)	Maximum flow rate (m^3/h)	Impulsion unit
KIT BOXPRES PLUS-2880 - 230	0.37	200 a 240 V 50/60 Hz	230 V 50/60 Hz	2880	CJBD-2828-4M 1/2
KIT BOXPRES PLUS-7100 - 230	0.37	200 a 240 V 50/60 Hz	230 V 50/60 Hz	7100	CJHCH-45-4T-0.5 IE3
KIT BOXPRES PLUS-7800 - 230	1.10	200 a 240 V 50/60 Hz	230 V 50/60 Hz	7800	CJBD-3333-6T 1 1/2
KIT BOXPRES PLUS-12900 - 230	0.75	200 a 240 V 50/60 Hz	230 V 50/60 Hz	12900	CJHCH-56-4T-1 IE3
KIT BOXPRES PLUS-17000 - 230	1.10	200 a 240 V 50/60 Hz	230 V 50/60 Hz	17000	CJHCH-63-4T-1.5 IE3
KIT BOXPRES PLUS-7800 - 400	1.10	380 a 480 V 50/60 Hz	400 V 50/60 Hz	7800	CJBD-3333-6T 1 1/2
KIT BOXPRES PLUS-12900 - 400	0.75	380 a 480 V 50/60 Hz	400 V 50/60 Hz	12900	CJHCH-56-4T-1 IE3
KIT BOXPRES PLUS-17000 - 400	1.10	380 a 480 V 50/60 Hz	400 V 50/60 Hz	17000	CJHCH-63-4T-1.5 IE3
KIT BOXPRES PLUS-21100 - 400	1.50	380 a 480 V 50/60 Hz	400 V 50/60 Hz	22100	CJHCH-71-4T-2 IE3

The output power is reduced by 20% when the equipment is operating in the lower power supply voltage range. The same models may be supplied with the KIT BOXPRES PLUS II for standby fan (a second impulsion unit is added that is equivalent to that of the KIT BOXPRES PLUS).

Dimensions mm

CJHCH

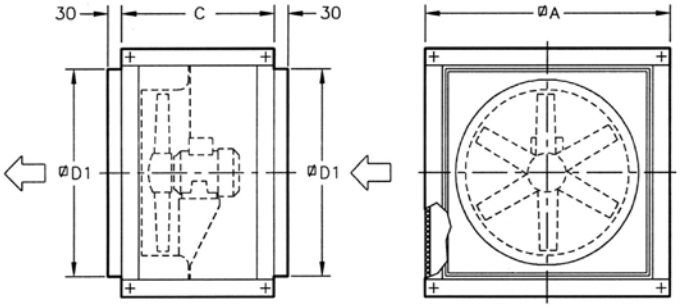

	∅A	C	∅D1
CJHCH-45	700	550	565
CJHCH-56/63	825	550	690
CJHCH-71	1000	650	850

CJBD

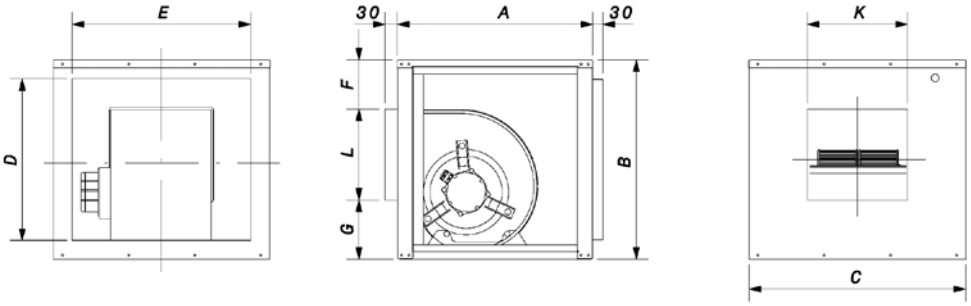

	Equivalence inches	A	B	C	D	E	F	G	K	L
CJBD-2828	10/10	550	575	600	479	504	104	177	330	294
CJBD-3333	12/12	650	650	700	554	604	105	198	392	347

BOXPRES PLUS

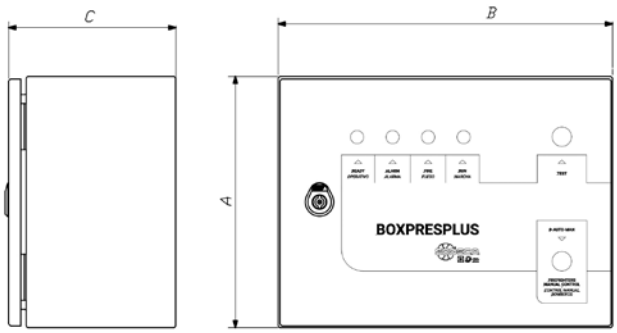

Size	A	B	C
1	300	400	200
2	400	500	250
3	400	600	250
4	500	700	250

PRESSKIT

Pressurisation equipment for lobbies, compliant with DM 30/11/1983 and designed according to the European standard EN 12101-6

Certified: NR331151

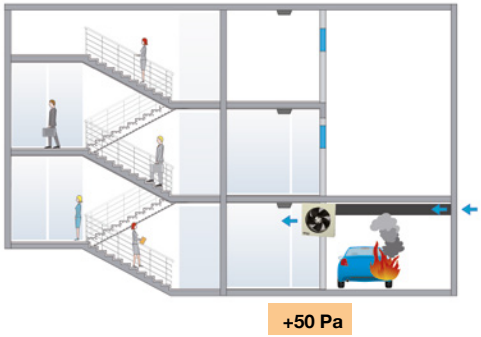

The PRESSKIT equipment is comprised of one or more fans. In the event of a fire, they are activated to exert an overpressure of 50 Pa in safe areas and to prevent the entry of smoke in the evacuation routes for people.

Common features:
- Self-regulation of pressure throughout the lobby.
- EC brushless fans 24 V DC with a maximum flow of 2100 m3/H.
- Maintain an overpressure of 50 Pa in hallways.

CONTROL PANEL
- S models: simplified regulation of the ventilation unit by means of a pressure probe with incorporated PID signal regulator.
- P models: PLC control with multiple inputs, outputs, alarms and fan regulation through PID signal.
- Power panel with autonomy of more than 2 hours using 18Ah batteries.
- Easy connection of equipment.
- Quick configuration and adjustment of all parameters through LCD screen and keyboard.
- MANUAL system activation button.
- Real time visualization of the pressure of the safe zone and the status of the equipment.
- Control panel of the system by means of a PLC of reduced size and easy installation. 230 VAC power.
- Open door detection digital input.
- Digital outputs indicating activated fire alarm. By visual and acoustic indicator in intermittent mode with configurable times.
- Configurable connection delay times in the event of fire alarm detection and open fire doors.
- Visualization of pressure in Pa in real time. Status indication of the STANDBY/ PRESSURIZING equipment.
- Possibility of controlling 2 fans with a single panel and power supply. (PRESSKIT TWIN).
- Key lock.

PRESSURIZATION FAN
- Wall fan for 310 mm diameter ducts.
- Lifespan in continuous work of more than 20,000 hours.
- Impeller made of painted sheet steel.
- Anti-contact protection grid.

PRESSURE SENSOR WITH DISPLAY (INCORPORATED IN CONTROL PANEL)
- Preset differential pressure sensor of 0-100 Pa.
- LCD screen.
- High precision calibrated analog sensor.

Control panel characteristics

- Total voltage (V): 1x230
- Output voltage 1 (V): 19.7-28 V DC
- Max. Output current 1 (A): 6
- Protection (IP): 44
- Approx. weight (Kg): 30.5
- Total current (A): 0.3
- Output voltage 2 (V): 19.7-28 V DC
- Max. Output current 2 (A): 7
- Operating temperature (ºC): -25 a +60

Order code

PRESSKIT — ONE — P

- PRESSKIT: Pressurisation equipment for lobbies, compliant with DM 30/11/1983 and designed according to the European standard EN 12101-6
- Kit format
  ONE: 1 Fan
  TWIN: 2 Fans
- Control options
  S: Single regulation
  P: PCL control

Technical characteristics

Model	Flow rate	Max-imum pressure	Speed	LpA irradi-ated 3 m	Total voltage	Total current	Total power	Approx. weight	Protection	Operating temperature	Nominal diameter of conduit
	(m³/h)	(Pa)	(r/min)	dB(A)	(V)	(A)	(w)	(Kg)	(IP)	(ºC)	(mm)
PRESSKIT ONE	2100	180	1800	65	24 V DC	4.8	115	7	42	-25 a +60	310
PRESSKIT TWIN	4100	180	1800	68	24 V DC	9.6	230	14	42	-25 a +60	310

Dimensions mm

PRESSURISATION FAN

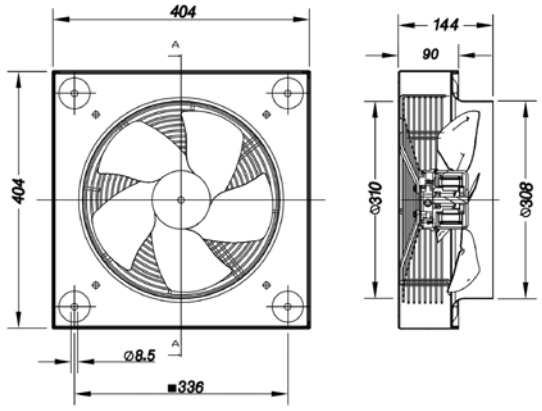

CONTROL PANEL

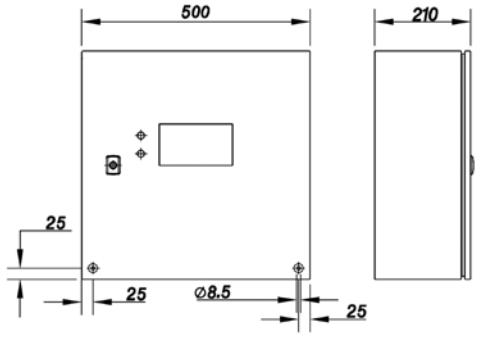

Kit characteristics

Component	PRESSKIT ONE	PRESSKIT TWIN
Regulation by means of pressure sensor	YES	YES
Regulation of several fans	-	YES*
Relay outputs to indicate the equipment is activated	YES	YES
Door sensor inputs	YES	YES

* PRESSKIT TWIN regulates two fans simultaneously with a single pressure sensor for large lobbies/ pressurised areas. The regulation of each fan is not separate, they have the same PID set point depending on the signal received from the sensor.

Configurations

Component	PRESSKIT ONE	PRESSKIT TWIN
EC FAN BRUSHLESS 24 VDC	1 unit	2 units
CONTROL PANEL	1 unit	1 unit
PRESSURE SENSOR (BUILT INTO CONTROL PANEL)	1 unit	1 unit

Accessories

ALARM PUSH BUTTON

CHECKER BATTERIES

Power source and battery output voltage checker via RJ45 connector.

BOXPRES PLUS

Control panel for a fan

The BOXPRES PLUS control panel includes:

- Variable frequency drive programmed at 50 Pa and highly accurate differential pressure probe.
- External connection for the control panel to be used exclusively by firefighters.
- Magnetic thermal switch.
- Status indicator lamp: Ready, Alarm, Fire and Run.
- Built-in control panel with TEST selector for maintenance and selector to be used exclusively by firefighters 0-AUTO-MANUAL.
- Operating procedures in safe mode in the case of failure of the differential pressure probe and automatic reset of the system in case of failure.
- Connection of status signals using free power contacts (FAULT, START and FIRE ACTIVATION) and connection to BMS systems via RTU Modbus for monitoring the equipment.
- Remains operational once activated by the fire alarm, even when the activation signal is interrupted.
- Metal casing with lock with key and with IP66 protection.
- Capable of managing asynchronous motors, IPM or RM.
- Ready to operate and perform its function of pressure control.
- Only the power supply, the impulsion fan and the fire signal need to be connected.
- Different input voltage ranges and power on demand.

Order code

BOXPRES PLUS — 1.1 — 230 — M

- BOXPRES PLUS: Control panel for a fan
  BOXPRES PLUS II: Control panel with standby fan
- Power (kW)
- Input voltage
- M: Single-phase input
  T: Three-phase input

Technical characteristics and dimensions

BOXPRES PLUS

Model	Power (kW)	Power supply (V) (Hz)	Outlet (V)	Max. Output current (A)	Size	Measurements (length x width x depth)	Approx. weight (Kg)
BOXPRES PLUS-0.37-230V 50/60Hz-M-T	0.37	200 a 240 V 50/60 Hz	230 V 50/60 Hz	2.3	1	300x400x200	11
BOXPRES PLUS-0.75-230V 50/60Hz-M-T	0.75	200 a 240 V 50/60 Hz	230 V 50/60 Hz	4.3	1	300x400x200	11
BOXPRES PLUS-1.5-230V 50/60Hz-M-T	1.50	200 a 240 V 50/60 Hz	230 V 50/60 Hz	7.0	1	300x400x200	11
BOXPRES PLUS-0.75-400V 50/60Hz-T-T	0.75	380 a 480 V 50/60 Hz	400 V 50/60 Hz	2.2	1	300x400x200	11
BOXPRES PLUS-1.5-400V 50/60Hz-T-T	1.50	380 a 480 V 50/60 Hz	400 V 50/60 Hz	4.1	1	300x400x200	11
BOXPRES PLUS-2.2-400V 50/60Hz-T-T	2.20	380 a 480 V 50/60 Hz	400 V 50/60 Hz	5.8	2	400x500x250	18
BOXPRES PLUS-4-400V 50/60Hz-T-T	4.00	380 a 480 V 50/60 Hz	400 V 50/60 Hz	9.5	2	400x500x250	18
BOXPRES PLUS-5.5-400V 50/60Hz-T-T	5.50	380 a 480 V 50/60 Hz	400 V 50/60 Hz	14.0	3	400x600x250	21
BOXPRES PLUS-7.5-400V 50/60Hz-T-T	7.50	380 a 480 V 50/60 Hz	400 V 50/60 Hz	18.0	3	400x600x250	21
BOXPRES PLUS-11-400V 50/60Hz-T-T	11.00	380 a 480 V 50/60 Hz	400 V 50/60 Hz	24.0	3	400x600x250	21

Technical characteristics and dimensions

BOXPRES PLUS II

For systems with a standby fan. The fans never operate simultaneously.

Model	Power (kW)	Power supply (V) (Hz)	Outlet (V)	Max. Output current (A)	Size	Measurements (length x width x depth)	Approx. weight (Kg)
BOXPRES PLUS II-0.37-230V 50/60Hz-M-T	0.37	200 a 240 V 50/60 Hz	230 V 50/60 Hz	2.3	2	400x500x250	18
BOXPRES PLUS II-0.75-230V 50/60Hz-M-T	0.75	200 a 240 V 50/60 Hz	230 V 50/60 Hz	4.3	2	400x500x250	18
BOXPRES PLUS II-1.5-230V 50/60Hz-M-T	1.50	200 a 240 V 50/60 Hz	230 V 50/60 Hz	7.0	2	400x500x250	18
BOXPRES PLUS II-0.75-400V 50/60Hz-T-T	0.75	380 a 480 V 50/60 Hz	400 V 50/60 Hz	2.2	2	400x500x250	18
BOXPRES PLUS II-1.5-400V 50/60Hz-T-T	1.50	380 a 480 V 50/60 Hz	400 V 50/60 Hz	4.1	2	400x500x250	18
BOXPRES PLUS II-2.2-400V 50/60Hz-T-T	2.20	380 a 480 V 50/60 Hz	400 V 50/60 Hz	5.8	3	400x600x250	20
BOXPRES PLUS II-4-400V 50/60Hz-T-T	4.00	380 a 480 V 50/60 Hz	400 V 50/60 Hz	9.5	3	400x600x250	20
BOXPRES PLUS II-5.5-400V 50/60Hz-T-T	5.50	380 a 480 V 50/60 Hz	400 V 50/60 Hz	14.0	4	500x700x250	28
BOXPRES PLUS II-7.5-400V 50/60Hz-T-T	7.50	380 a 480 V 50/60 Hz	400 V 50/60 Hz	18.0	4	500x700x250	28
BOXPRES PLUS II-11-400V 50/60Hz-T-T	11.00	380 a 480 V 50/60 Hz	400 V 50/60 Hz	24.0	4	500x700x250	28

Connections

*All connections are made at the top section of the panel.

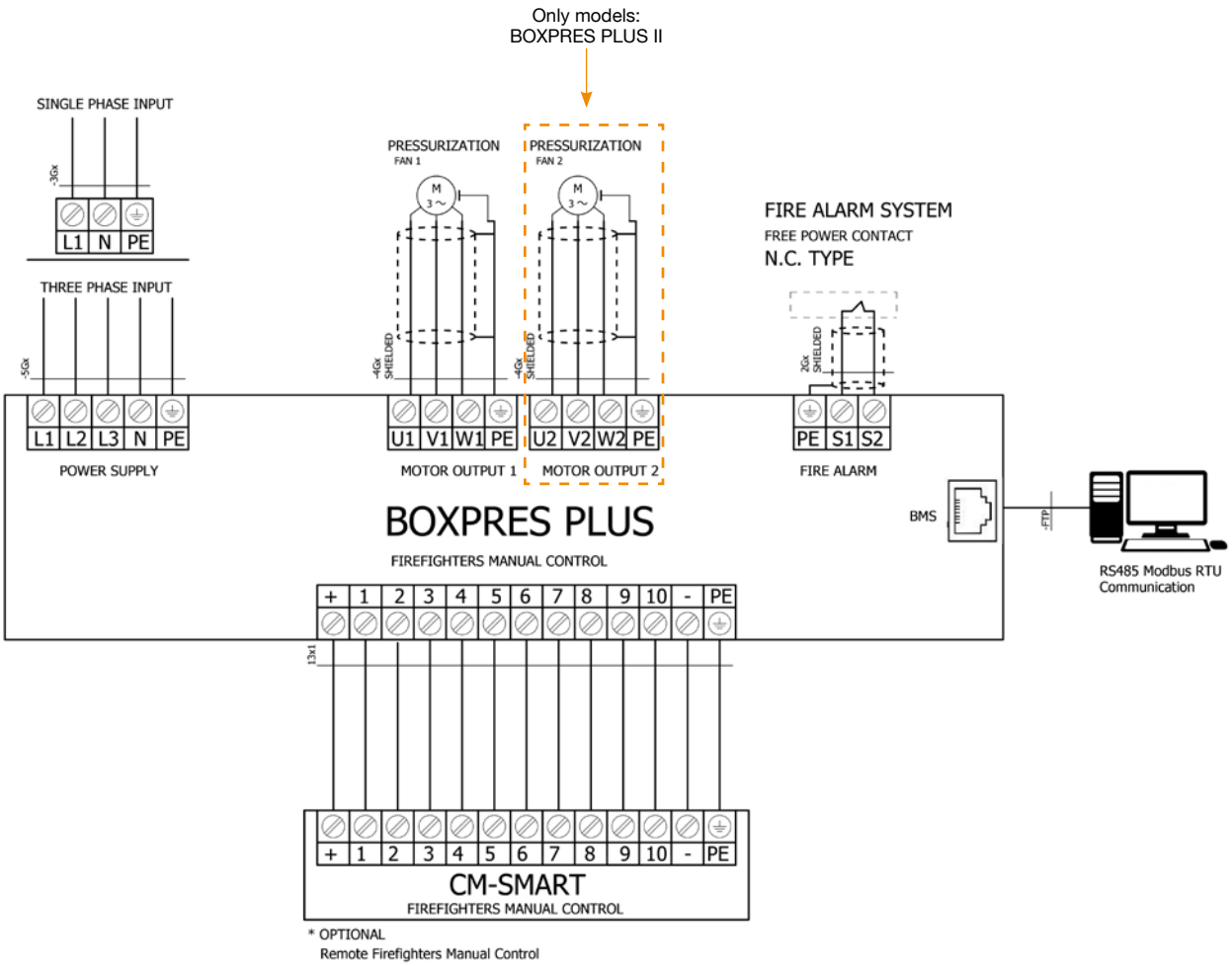

Dimensions mm

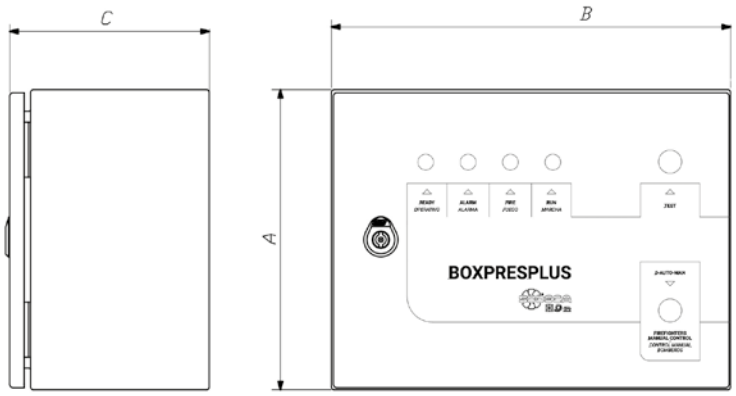

Size	A	B	C
1	300	400	200
2	400	500	250
3	400	600	250
4	500	700	250

Application example

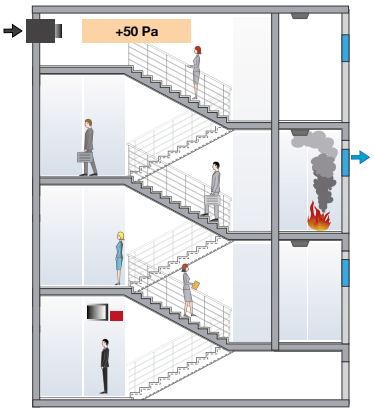

Overpressure smoke control method

This system uses pressurisation by injecting air into spaces that are used as evacuation routes in the event of a fire, including stairwells, corridors, passageways, lifts, etc., especially in tall buildings with high occupancy.

The method is based on using air speed and over pressure to create a barrier, preventing smoke from entering evacuation routes.

Accessories

CM-SMART

PDS LOBBY CONTROL

Control panel and independent automatic regulation for lobby pressurisation systems

Control panel and independent automatic regulation for lobby pressurisation systems in accordance with standard EN 12101-6, compatible with systems KIT BOXPDS and KIT BOXPDS SMART acting as remote pressure sensor and with automatic damper control to maintain overpressure in lobbies in case of fire.

The PDS LOBBY CONTROL panel includes:

- Built-in high precision differential pressure sensor.
- LCD screen and controls for programming all functions.
- Modbus RTU connection for communications with KIT BOXPDS and KIT BOXPDS SMART, or to connect with a BMS system.
- Activation from the fire panel via a configurable potential free contact.
- OPEN/CLOSE control of two independent motorised dampers (24 V DC) for supply and/or exhaust air.
- Control of a motorised damper that opens proportionally according to a 0-10 VDC signal to supply or exhaust air.
- Manual activation via a configurable potential free contact.
- Local activation via an autonomous analogue 4-20 mA smoke sensor.
- Casing with IP54 protection rating.
- Working temperature range -10 ºC +50 ºC.
- Power supply: selectable between 230 V AC 50/60 Hz or 24 V DC.
- NO/NC configurable potential free relay outputs: STATUS (OK or FAULT).
- NO/NC configurable potential free relay outputs: Activation confirmation to the fire panel.

Easy system configuration via pushbutton control panel and LCD screen.

Technical characteristics

Model	Supply voltage	Nominal current	Pressure range	Operating temperature	Approx. weight	Protection class
	(V)	(A)	(Pa)	(ºC)	(Kg)	
PDS LOBBY CONTROL	230 V AC 50/60 Hz	0.6	0-2500	-10 a +50	0.9	IP 54
	24 V DC	0.6	0-2500	-10 a +50	0.9	IP 54

Dimensions mm

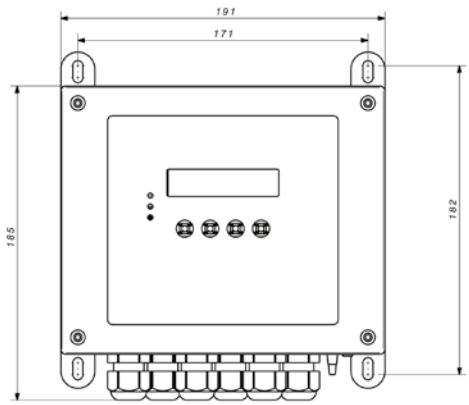

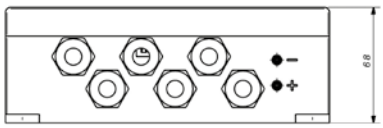

Connections

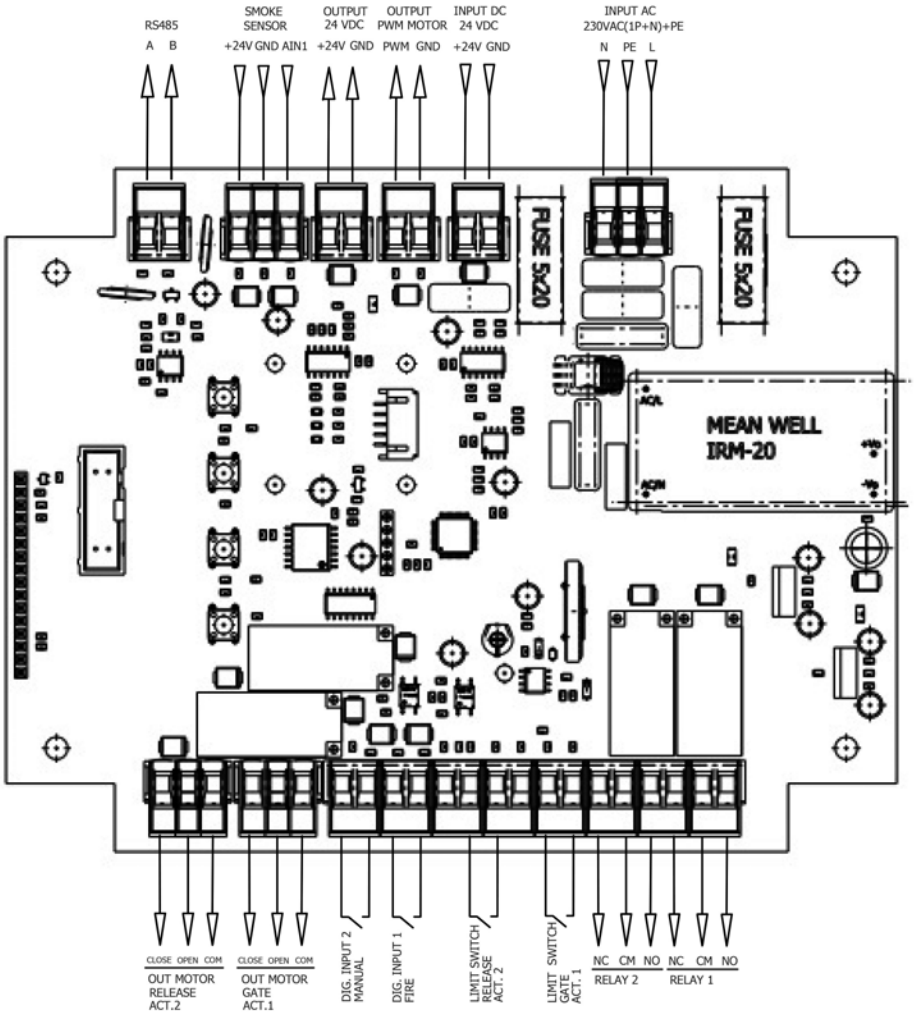

DAMPER BOX
DAMPER BOX SMART

Motorized damper with built-in optical smoke detector for pressurization systems

DAMPER BOX
- Motorized damper with built-in analog optical smoke detector compatible with KIT BOXPDS pressurization systems.

DAMPER BOX SMART
- Motorized with high sensitivity optical smoke detector, with automatic reset and alarm management, compatible with KIT BOXSMART and KIT BOXPDS SMART pressurization systems.

Characteristics:
- Multiblade damper for air supply in pressurization systems.
- The damper fits directly on the CJHCH ventilation unit or in duct.
- Construction in galvanized steel sheet and aluminum sheet blades.
- Aerodynamic blades with opposed arrangement and sealing gasket.
- Optical smoke detector to ensure clean air intake. In case of smoke detection, the damper closes from the BOXSMART, KIT BOXPDS or KIT BOXPDS SMART pressurization control panel.
- Maintenance manhole cover.

Opening system:
- Opening and closing by fast damper actuator.
- Opening and closing time 2.5 seconds.
- Power supply AC/DC 24 V 50/60 Hz.
- Auxiliary contacts for monitoring of open or closed damper.

On request:
- DAMPER BOX AF and DAMPER BOX SMART AF with AntiFrost system with ultraviolet light heating element and adjustable thermostat to prevent frost build-up on the door in cold climates.

Order code

DAMPER BOX — 56/63 — AF

- ***DAMPER BOX*** → DAMPER BOX: Motorized with built-in optical smoke detector compatible with KIT BOXPDS pressurization systems
  DAMPER BOX SMART: Motorized with built-in optical smoke detector compatible with KIT BOXSMART and KIT BOXPDS SMART pressurization systems.
- ***56/63*** → Compatible fan diameter
- ***AF*** → AntiFrost system

Dimensions mm

	A	B	C	D
DAMPER BOX 56/63	835	690	690	326.5
DAMPER BOX 71/80	995	850	850	326.5
DAMPER BOX 90/100	1195	1050	1050	326.5
DAMPER BOX SMART 56/63	835	690	690	350
DAMPER BOX SMART 71/80	995	850	850	350
DAMPER BOX SMART 90/100	1195	1050	1050	350

BxC: Duct measurements.

SCDLS-MA

Single compartment smoke control dampers with manual and automatic operation

Characteristics:
- Rectangular gate from 200 x 200 mm to 1200 x 1200 mm.
- CE-certified according to EN 12101-8.
- Tested according to EN 1366-10.
- Cycle test class Cmod according to EN 12101-8.
- Damper actuation via 24 V or 230 V electric actuator.
- External casing leakage Class B, internal leakage Class 3 according to EN 1751.
- For vertical or horizontal installation.
- Classified according to EN 13501-4+A1 as EIS 120/600, acting MA or AA in single compartment.
- Maximum recommended velocity 12 m/s, allowable pressure up to 500 Pa, depression up to -1500 Pa.
- 250 mm wide damper.
- Designed for systems with automatic or manual activation.
- The damper is supplied with flanges.
- Working temperature: -30 ºC +50 ºC.

Order code

SCDLS-MA	200 x 200	—	.44	F	TPM 121/16
SCDLS-MA: Single compartment smoke control dampers with manual and automatic operation	Nominal size		Damper design according to the table	F: Flanges with a height of 20 mm I: Insulation on the inside of the slats	Technical specifications (fixed)

Damper design	Additional digit
With actuating mechanism BEN, BEE, BE for 230 V	.44
With actuating mechanism BEN, BEE, BE for 24 V	.54
With actuating mechanism BEN (BEE)-SR for 24 V	.65*

* Design .65 is not available by using BE actuator.

SCDRS-MA

Single compartment circular smoke control dampers with manual or automatic operation

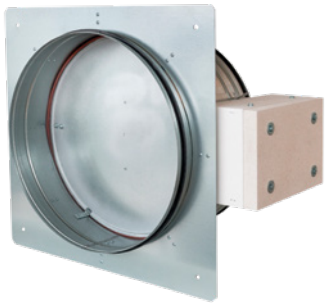

Characteristics:
- Circular damper from ø 100 to 630 mm.
- CE-certified according to EN 12101-8.
- Tested according to EN 1366-10.
- Classified according to EN 13501-4+A1 as EIS 120/600, acting MA or AA in single compartment.
- External enclosure leakage Class C, internal leakage Class 4.
- Cycle test class Cmod according to EN 12101-8.
- Damper actuation via 24 V or 230 V electric actuator.
- Recommended maximum speed 15 m/s, permissible pressure up to 500 Pa, or vacuum up to -1500 Pa.
- Designed for systems with automatic or manual activation.
- Working temperature: -30 °C +50 °C.

Order code

SCDRS-MA	***355***	***—***	***.44***	***TPM 120/16***
SCDRS-MA: Single compartment circular smoke control dampers with manual or automatic operation	Nominal size		Damper design according to the table	Technical specifications (fixed)

Damper design	Additional digit
With 230 V BEN actuator	.44
With 24 V BEN actuator	.54
With 24 V BEN-SR actuator	.65

SCDLM-MA

Multi-compartment smoke control dampers with manual and automatic activation

Characteristics:
- Rectangular fire damper from 200 x 430 mm to 1200 x 2030 mm.
- CE-certified according to EN 12101-8.
- 250 mm wide damper.
- Tested according to EN 1366-10.
- Classified according to EN 13501-4+A1 as EIS 120, with AA/MA positioning for Multi-compartment fire protection.
- Cycle test class Cmod according to EN 12101-8.
- External housing leakage Class C, internal leakage Class 3 according to EN 1751.
- Damper actuation via 24 V or 230 V electric actuator.
- Designed for systems with automatic or manual activation.
- Recommended maximum speed 12 m/s, allowable pressure up to 500 Pa, or vacuum up to -1000 Pa.
- The damper can be supplied with or without flanges.
- The dampers are suitable for vertical and horizontal installation.
- Working temperature: -30 °C +50 °C.

Order code

SCDLM-MA 1200-2030 — .44 / M2 / - TPM 146/20

- SCDLM-MA: Multi-compartment smoke control dampers with manual and automatic activation
- 1200-2030: Nominal size
- .44: Damper design according to the table
- M2: Left side
- -: Right side
- TPM 146/20: Technical specifications (fixed)

-: Without flange and grille
P1: Flange over slats
P2: Flange over damper
M1: Flange and grille over slats*
M2: Flange and grille over damper*

Damper design	Additional digit
With actuating mechanism BEN, BEE, BE for 230 V	.44
With actuating mechanism BEN, BEE, BE for 24 V	.54
With actuating mechanism BEN (BEE)-SR for 24 V	.65**

* Standard grille colour RAL 9006, other colours available on request.
** Design .65 is not available by using BE actuator.

HEADQUARTER

Sodeca, S.L.U.
Pol. Ind. La Barricona
Carrer del Metall, 2
E-17500 Ripoll
Girona, SPAIN
Tel. +34 93 852 91 11
General sales: comercial@sodeca.com
Export sales: ventilation@sodeca.com

PRODUCTION PLANT

Sodeca, S.L.U.
Ctra. de Berga, km 0,7
E-08580 Sant Quirze de Besora
Barcelona, SPAIN
Tel. +34 93 852 91 11
General sales: comercial@sodeca.com
Export sales: ventilation@sodeca.com

EUROPE

FINLAND
Sodeca Finland, Oy
HUITTINEN
Sales and Warehouse
Mr. Kai Yli-Sipilä
Metsälinnankatu 26
FI-32700 Huittinen
Tel. + 358 400 320 125
orders.finland@sodeca.com

FINLAND
Sodeca Finland, Oy
VANTAA
Sales and Warehouse
Ainontie 12
FI-01630 Vantaa

Smoke Extraction
Mr. Antti Kontkanen
Tel. +358 400 237 434
akontkanen@sodeca.com
Mrs. Kaisa Partanen
Tel. +358 451 308 038
kpartanen@sodeca.com

Industrial Applications
Mr. Jarno Pikkumäki
Tel. +358 407 723 472
jpikkumaki@sodeca.com

ITALIA
Sodeca Italia
Viale del Lavoro, 28
37036 San Martino B.A.
(VR), ITALY
Tel. +39 045 87 80 140
vendite@sodeca.com

NORWAY
Sodeca Norge AS
Per Krohgs vei 4C
1065 Oslo
NORWAY
Tel. +47 23 28 80 90
post@sodeca.no

PORTUGAL
Sodeca Portugal, Unip. Lda.
PORTO
Rua Veloso Salgado
1120/1138
4450-801 Leça de Palmeira
Tel. +351 229 991 100
geral@sodeca.pt

LISBOA
Pq. Emp. da Granja Pav. 29
2625-607 Vialonga
Tel. +351 219 748 491
geral@sodeca.pt

ALGARVE
Rua da Alegria, 33
8200-569 Ferreiras
Tel. +351 289 092 586
geral@sodeca.pt

UNITED KINGDOM
Sodeca Fans UK, Ltd.
Mr. Mark Newcombe
Tamworth Enterprise Centre
Philip Dix House, Corporation
Street, Tamworth, B79 7DN
UNITED KINGDOM
Tel. +44 (0) 1827 216 109
sales@sodeca.co.uk

AMERICA

CHILE
Sodeca Ventiladores, SpA.
Sra. Sofía Ormazábal
Santa Bernardita 12.005
(Esquina con Puerta Sur)
Bodegas b24 a b26,
San Bernado, Santiago, CHILE
Tel. +56 22 840 5582
ventas.chile@sodeca.com

COLOMBIA
Sodeca Latam, S.A.S.
Sra. Luisa Stella Prieto
Calle7 No. 13 A-44
Manzana 4 Lote1, Montana
Mosquera, Cundinamarca
Bogotá, COLOMBIA
Tel. +57 1 756 4213
ventascolombia@sodeca.co

PERU
Sodeca Perú, S.A.C.
Sr. Jose Luis Jiménez
C/ Mariscal Jose Luis de
Orbegoso 331. Urb. El pino.
15022, San Luis. Lima, PERÚ
Tel. +51 1 326 24 24
Cel. +51 994671594
comercial@sodeca.pe

MIDDLE EAST AND ASIA

UNITED ARAB EMIRATES
Sodeca MEA Trading L.L.C
C-83, Sama Residence
Al Nahda First, Deira, DUBAI
orders.mea@sodeca.com

04/2025

CERTIFIED
ISO 9001

HEADQUARTER

Sodeca, S.L.U.
Pol. Ind. La Barricona
Carrer del Metall, 2
E-17500 Ripoll
Girona, SPAIN
Tel. +34 93 852 91 11
General sales: comercial@sodeca.com
Export sales: ventilation@sodeca.com

PRODUCTION PLANT

Sodeca, S.L.U.
Ctra. de Berga, km 0,7
E-08580 Sant Quirze de Besora
Barcelona, SPAIN
Tel. +34 93 852 91 11
General sales: comercial@sodeca.com
Export sales: ventilation@sodeca.com

www.sodeca.com